ASTORIA MACCHINE PER CAFFÈ S.R.L.
Via Condotti Bardini, 1 - 31058 SUSEGANA (TV) - ITALY - Tel. +39.0438.6615 - Fax +39.0438.60657 - www.astoria.com - info@astoria.com

CE
2006/42/CE Machinery Directive

SABRINA

SAE
DISPLAY

EN
ORIGINAL INSTRUCTIONS

ESPRESSO COFFEE MACHINE
Use and Maintenance Manual. TECHNICIANS' Instructions.

Astoria®
Think espresso

IMPORTANT: Read carefully before use - Store for future reference

Liability We are constantly committed to improving the accuracy of the information published in every Manual; some inaccuracies, however, may occur. We assume no responsibility for any errors or omissions, or for damages resulting from the use of this document.

WARNING APPLICABLE TO US CUSTOMERS:

Consuming beverages that have been prepared in this espresso machine will expose you to lead, a chemical known to the State of California to cause birth defects or other reproductive harm.

I. SAFETY PRECAUTIONS

I.I LEVEL OF TRAINING AND KNOWLEDGE REQUIRED OF THE TECHNICIAN

Qualified Technicians must be properly trained and informed in order to connect and assemble the machine; use special equipment (hoists, forklifts, etc.); perform routine or unscheduled maintenance, as well as work on residual risks resulting from these operations and while the machine is in use.
A Qualified Technician must be able to apply all good practices in compliance with food hygiene principles.

I.II SAFETY PRECAUTIONS

Even though the machine is provided with all safety devices required to eliminate possible risks for the User, there are still certain residual risks.
These so-called residual risks are related to machine parts that may pose a risk to the Technician, if used improperly, evaluated or deactivated incorrectly, because the prescriptions contained in this Manual were circumvented.
The machine is also equipped with appropriate warnings placed on residual risk areas, which must be scrupulously observed.

It is necessary to pay attention to residual risks present during the operations described below, and that cannot be neutralised:

I.III TRANSPORT AND HANDLING

	Hand crushing hazard

Handling operations must always and exclusively be performed by qualified personnel and in compliance with the current health and safety regulations.

Before starting the transport and/or handling manoeuvres, check the route, dimensions needed, safety distances, places suitable for placing the load down, and the appropriate equipment for the operation.

Handling operations must be carried out by at least 2 people, or with the help of special lifting equipment.

In view of the substantial weight of the equipment, exercise great caution during the handling operations.

The Manufacturer is not responsible for any injury or damage caused by clothing, lifting equipment and personal equipment which was not suitable for the type of intervention that the operator had to carry out.

The packaging material must not be left within the reach of children, since it is a potential source of danger.

I.IV INSTALLATION

	Electrical hazard
	Equipotential hazard
	High temperature hazard
	Do not perform maintenance on moving components

Installation must always and exclusively be performed by qualified personnel and in compliance with the current health and safety regulations.

The appliance's water supply must provide water which is suitable for human consumption, and must conform with the regulations in force in the place of installation.

The installer must carry out the hydraulic connections in accordance with the hygiene norms and the hydraulic safety norms for environmental protection in force in the place of installation.

This appliance is to be considered completely safe only when it is connected to an efficient earthing system which complies with safety standards.

The electric system must be equipped with a suitable GFCI (circuit breaker). It is important to have these requirements checked. If in doubt, have the system carefully checked by qualified personnel. The manufacturer cannot be considered responsible for any damage caused by an inadequate electric system.

Make sure that the supply power is enough to supply the energy needed for the machine to operate.

Perform the installation with the machine disconnected from the power supply via the main switch.

I.V COMMISSIONING

	Electrical hazard
	High temperature hazard

When using the electrical appliance, several safety standards must be observed:

- Do not touch the appliance with wet or damp hands or feet;
- Do not use the appliance barefooted;
- Do not pull the power cord to disconnect the appliance.

Some parts of the machine can reach high temperatures:

- Avoid contact with the dispensing group, water spouts and steam nozzles;
- Do not place your hands or other body parts near the steam, hot water or milk dispensing nozzle tips.

I.VI MAINTENANCE AND CLEANING

The only personnel who can access the service area are those who are knowledgeable about and have practical experience using the appliance, particularly in regards to safety and hygiene.

	Electrical hazard
	High temperature hazard

Maintenance and cleaning operations must comply with the safety regulations:

- Do not carry out maintenance with the machine in operation;
- Do not immerse the machine in water;
- Do not spill liquids on the machine or use water jets when cleaning;
- Do not allow maintenance and cleaning operations to be carried out by children or incompetent people;
- Do not perform maintenance and cleaning operations other than those described in this manual.

When cleaning, pay attention to the parts of the machine that can become hot:

- Avoid contact with the dispensing group, water spouts and steam nozzles;
- Do not place your hands or other body parts near the steam, hot water or milk dispensing nozzle tips.

Only perform the maintenance and cleaning operations indicated in this manual.

If the problem cannot be resolved, switch off the machine and contact the Manufacturer.

All maintenance operations must be carried out when the power supply has been turned off, the water mains has been closed off, and the machine has completely cooled down.

After maintenance and/or repair work, the components that are used must ensure that the hygiene and safety requirements initially provided for the appliance are still met. These are met by only using original spare parts. When components which come into contact with water or food are repaired or replaced, a washing procedure has to be carried out, as if it were the first installation.

Any unauthorised tampering with any parts of the machine renders any guarantee null and void.

ENGLISH

ESPRESSO COFFEE MACHINE

Use and Maintenance Manual. TECHNICIANS' Instructions.

English

Table of contents

1. INTRODUCTION 7
   1.1 Guidelines for reading the Manual 7
   1.2 Storing the Manual 8
   1.3 Method for updating the Instruction Manual 8
   1.4 Recipients 8
   1.5 Glossary and Pictograms 8
   1.6 Guarantee 9
2. MACHINE IDENTIFICATION 10
   2.1 Make and model name 10
   2.2 General description 10
   2.3 Customer service 10
   2.4 Intended use 10
   2.5 Machine diagram 12
   2.6 Internal components 13
   2.7 Front command push button panel 14
   2.8 Steam wand push button panel 14
   2.9 Warning indicators 14
   2.10 Touchscreen display 14
   2.11 Data and marking 15
3. TRANSPORT AND HANDLING 22
   3.1 Safety precautions 22
   3.2 PPE features 22
   3.3 Size and weight 22
   3.4 Handling the packed machine 22
   3.5 Unpacking the machine 22
4. STORAGE 23
   4.1 Overview 23
   4.2 Storing the machine after operation 23
5. INSTALLATION 23
   5.1 Safety precautions 23
   5.2 PPE features 23
   5.3 Environmental conditions 23
   5.4 Installation and operation spaces 24
   5.5 Support base 24
   5.6 Drilling the support base 26
   5.7 Hydraulic connection 27
   5.8 Electrical connection 28
6. COMMISSIONING 29
   6.1 Safety precautions 29
   6.2 Preparing the filter holders 29
   6.3 Coffee grind 29
   6.4 Adjusting the external motor pump 29
   6.5 Raised cup grilles 29
   6.6 Lighting 30
   6.7 Steam wand 30
   6.8 Turning the machine on and off 30
   6.9 Water renewal 32
7. SAE - DISPLAY MACHINE PROGRAMMING 33
   7.1 Parameters 34
   7.2 Settings 41
   7.3 Info 44
8. MAINTENANCE AND CLEANING 46
   8.1 Safety precautions 46
   8.2 PPE features 46
   8.3 Maintenance 46
   8.4 Water filter maintenance 50
   8.5 Water softener regeneration 52
   8.6 Malfunctions and solutions 53
   8.7 Cleaning operations 55
9. SPARE PARTS 57
10. DISPLAY WARNINGS 58
11. DECOMMISSIONING 59
   11.1 Short period of machine inactivity 59
   11.2 Long period of machine inactivity 59
12. DISASSEMBLY 59
13. DISPOSAL 59
   13.1 Disposal information 59
   13.2 Environmental information 59
14. WIRING DIAGRAMS 60
   14.1 ELECTRIC MAINS connection 60
   14.2 SAE wiring diagram 61
   14.3 SAE DISPLAY wiring diagram 62
15. hydraulic diagram 63
   15.1 CTS GROUP hydraulic diagram 63
   15.2 EXTRACTABLE EXCHANGER hydraulic diagram 64
16. CREDIT - DEBIT SYSTEM 65
   16.1 CREDIT - DEBIT system with direct connection to the till 65
   16.2 DEBIT - CREDIT system with direct connection to the till 66

1. INTRODUCTION

Read this manual carefully. It provides important safety information to the Technician regarding the operations indicated in this document.

Keep this Manual in a safe place. If you lose it, you can ask the Manufacturer for another copy.

The Manufacturer of the appliance cannot be held responsible for any damage caused due to the non-observance of the requirements listed in this manual.

Before operating on the machine, read the instructions contained in this publication and follow the guidelines carefully. Keep this manual and all attached publications in an accessible and secure place.

This document assumes that the machine is installed in a location where the current work safety and hygiene standards are observed.

The instructions, drawings and documentation contained in this Manual are technical and confidential. They are the sole property of the Manufacturer, and may not be fully or partially reproduced in any way.

The Manufacturer reserves the right to make any improvements and/or modifications to the product. We guarantee that this Manual reflects the technical state of the appliance at the time it was released to the market.

We encourage the Qualified Technicians to make any proposals in regards to improving the product or its Manual.

1.1 Guidelines for reading the Manual

This Manual is divided into separate chapters. The chapter order is linked to the temporal logic of the life of the machine.

Terms, abbreviations and pictograms are used to facilitate the immediate understanding of the text.

This Manual consists of cover, index and a series of chapters. Each chapter is sequentially numbered. The page number is shown in the footer.

The machine identification data is displayed on the machine's nameplate and the CE declaration of Conformity, whilst the date and revision of the Instruction Manual is provided on the last page.

ABBREVIATIONS

Sec. = Section
Chap. = Chapter
Para. = Paragraph
P. = Page
Fig. = Figure
Tab. = Table

UNITS OF MEASUREMENT

The units of measurement are those provided by the International System (SI).

PICTOGRAMS

Descriptions preceded by these symbols contain very important information/requirements, particularly in regards to safety. Failure to comply with these may result in:

- A safety risk for those operating the machine;
- Injury, including serious injury (in some cases even death);
- Loss of the guarantee;
- The Manufacturer waiving liability.

DANGER symbol used when there is a risk of permanent serious injury that would require hospitalisation, or in extreme cases, even cause death.

CAUTION symbol used when there is a risk of minor injury that could require medical attention.

WARNING symbol used when there is a risk of minor injury that could be treated with first-aid or similar measures.

NOTE symbol used to provide important information about the topic.

ENGLISH

1.2 Storing the Manual

The Instruction Manual must be stored carefully. The manual should be stored, handled with care with clean hands and not placed on dirty surfaces. The Manual must be stored in an environment protected from moisture and heat.

Do not remove, tear or arbitrarily modify any of its parts.

On the Qualified Technician's request, the manufacturer can provide additional copies of the machine's Instruction Manual.

1.3 Method for updating the Instruction Manual

The Manufacturer reserves the right to modify and make improvements to the machine without providing notice or updating the Manual that has already been received.

Moreover, when substantial changes have been made to the already installed machine involving the modification of one or more chapters of the Instruction Manual, the manufacturer will send the Qualified Technicians the chapters affected by the changes or a revision of the entire Manual.

It is the Qualified Technicians' responsibility, to replace the old document with the new revision.

The Manufacturer is responsible for the Italian content. Translations cannot be fully verified; therefore, in the event of inconsistency, users can refer to the Italian version or if necessary, contact the Manufacturer who will make the appropriate changes.

If the Manual should become illegible or otherwise hard to consult, Qualified Technicians are obliged to request a new copy from the Manufacturer before carrying out any work on the machine.

It is absolutely forbidden to remove or rewrite parts of the Manual.

The instructions, drawings and documentation contained in this manual are confidential and the sole property of the Manufacturer. They may not be reproduced in any way, either in full, or in part without prior authorisation.

The Qualified Technicians are responsible for complying with the instructions contained in this Manual.

Should any incident occur as a result of incorrect use of these recommendations, the Manufacturer declines any liability.

This manual is also available on the manufacturer's website.

1.4 Recipients

This Manual is intended for the Manufacturer's Qualified Technicians, to whom the following operations pertaining to the machine are assigned:

- Transport and handling;
- Storage;
- Installation;
- Commissioning;
- Maintenance;
- Cleaning;
- Spare part replacement;
- Emergency operations and faults;
- Decommissioning;
- Disassembly;
- Disposal.

RECIPIENT QUALIFICATIONS

The machine is intended for a professional non-generalised use, therefore the Qualified Technicians must:

- Have attended the training courses organised by the Manufacturer relating to the type of machine;
- Be aged 18 and over;
- Be physically and mentally fit to use the machine;
- Be able to understand and interpret the Instruction Manual and the safety requirements;
- Know the safety procedures and how they are implemented;
- Be able to use the machine;
- Have understood the procedures of use as defined by the machine's manufacturer.

1.5 Glossary and Pictograms

This paragraph lists uncommon terms or terms whose meanings are different from those most commonly used.

Abbreviations are explained below, as well as the meaning of pictograms describing the operator's qualification and the machine status; they are used to quickly and uniquely provide the information needed to correctly and safely use the machine.

1.5.1 GLOSSARY

User

The person or persons in charge of operating and periodically maintaining and cleaning the machine as indicated in the user manual.

Manufacturer's Qualified Technician

A specialist, specially trained and qualified to connect, install and assemble the machine; use special equipment (hoists, forklifts, etc.); perform routine or unscheduled maintenance which would be particularly complicated or potentially dangerous if performed by the User.

User or Qualified Technician Qualifications

Minimum level of skills an operator must have to carry out the operation described.

Danger

A potential source of injury or damage to health.

Dangerous area

Any area in the vicinity of the machine where the presence of a person constitutes a risk to the safety and health of that person.

Risk

Combination of the probability and severity of an injury or damage to health that can arise in a hazardous situation.

Guard

Machine component used specifically to provide protection by means of a physical barrier.

Personal protective equipment (PPE)

Clothing or equipment worn by someone to protect their health or safety.

Intended use

The use of the machine in accordance with the information provided in the instructions for use.

Machine status

The machine status includes the mode of operation and the condition of the machine's safety devices.

Residual risk

Risks that remain despite adopting the protective measures integrated into the machine's design and despite the guards and complementary protective measures that have been adopted.

Safety component

- required to perform a safety function;
- whose failure and/or malfunction endangers the safety of persons.

1.5.2 PICTOGRAMS

PICTOGRAM	DESCRIPTION
	Electrical hazard
	Equipotential hazard
	High temperature hazard
	Hand crushing hazard
	Do not perform maintenance on moving components
	The use of protective gloves is mandatory
	The use of eye protection is mandatory
	The use of safety shoes is mandatory
	It is mandatory to read the documentation

1.6 Guarantee

All of the machine's components are covered by a 12-month guarantee, except for electrical and electronic components and parts prone to wear and tear.

Any work carried out on the machine electronics when the machine is still live will automatically invalidate any guarantee.

ENGLISH

2. MACHINE IDENTIFICATION

2.1 Make and model name

The machine and model ID information is found on the unit's NAMEPLATE and in the provided EC DECLARATION OF CONFORMITY.

2.2 General description

The machine described in this Manual consists of mechanical, electrical, and electronic components which, when used together, produce milk, coffee and water-based beverages.

This product is manufactured in compliance with the EU Directives, Regulations and Standards indicated in the EC DECLARATION OF CONFORMITY provided with the machine.

This machine is designed and constructed to operate only after being properly connected to a hydraulic and electrical network and placed so as to be sheltered from atmospheric agents.

2.3 Customer service

2.4 Intended use

The espresso coffee machine has been designed to professionally prepare hot drinks such as tea, cappuccinos and weak, strong and espresso coffee, etc.

The appliance is not intended for domestic use, it is intended for professional purposes only.

The machine can be used under all the conditions set forth, contained or described in this document; any other conditions must be considered dangerous.

The machine must be installed in a place where its access is restricted to qualified personnel only who have received suitable training (coffee shops, restaurants, etc.).

PERMITTED USES

All uses compatible with the technical features, operations and applications described in this document which do not endanger the safety of users or cause damage to the machine or its surrounding environment.

All uses not specifically mentioned in this Manual are prohibited and must be expressly authorised by the Manufacturer.

INTENDED USES

The machine has been designed exclusively for professional use.

The use of products/materials other than those specified by the Manufacturer, which can cause damage to the machine and be dangerous for the operator and/or those in close proximity to the Machine, is considered incorrect or improper.

CONTRAINDICATIONS OF USE

The machine must not be used:

- For uses other than those listed in para. 3.4, for different uses or uses not mentioned in this Manual;
- With materials other than those listed in this Manual;
- With safety devices that have been disabled or are not working.

INCORRECT USE OF THE MACHINE

The type of application and performance that this machine has been designed for, requires a number of operations and procedures that cannot be changed, unless previously agreed with the Manufacturer. Only operations discussed in this document are allowed; any operation not listed and described herein is to be considered improper and, therefore, hazardous.

IMPROPER USE

The only permitted uses are described in the Manual; any other use is considered improper and, therefore, hazardous.

GENERAL SAFETY FEATURES

The user must be aware of accident risks, safety devices and the general safety rules set forth in EU directives and by the legislation of the country where the line is installed.

The user must know how all the machine's devices work.

They must also have fully read this Manual.

Maintenance work must be performed by qualified technicians after the machine has been properly assembled.

The tampering or unauthorised replacement of one or more machine components, the use of accessories which modify its use and the use of materials other than those recommended in this Manual, can cause accidents.

2.5 Machine diagram

1. ON switch
2. Hot water spout
3. Front commands
4. Cup warmer shelf
5. Warning indicators
6. Illuminated side panel
7. Scald protection
8. Steam nozzle
9. Adjustable foot
10. Steam knob
11. Flipping raised cup grilles (raised group version).
12. Filter holder
13. Cup holder grille
14. Pressure gauge
15. Display
16. USB port
17. Steam wand push button panel (*)
18. Steam wand nozzle (*)
19. Side panel light switch
20. Work surface light switch

(*) Optional device

The USB stick exclusively provided to the Qualified Technicians is the only stick that can be used in the USB port (7). Do not connect external devices (iPhones, iPads, PCs, etc.) to the USB port because it could create serious machine software problems.

SAE version

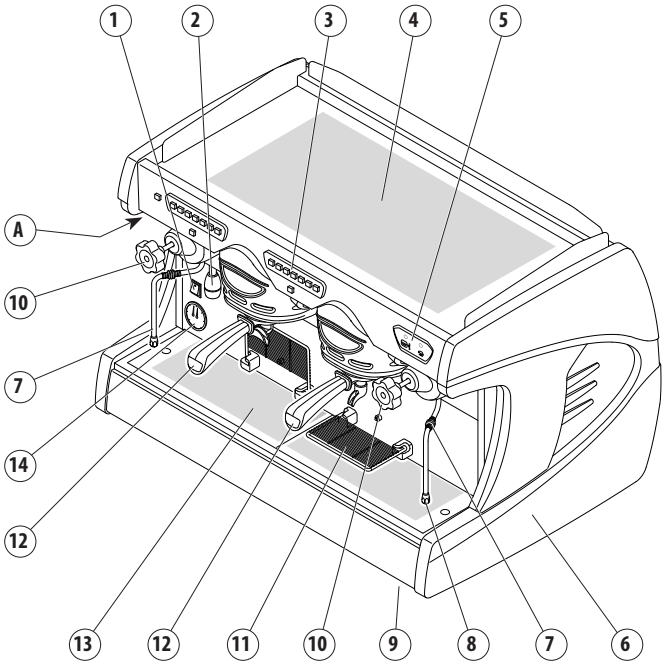

SAE DISPLAY version

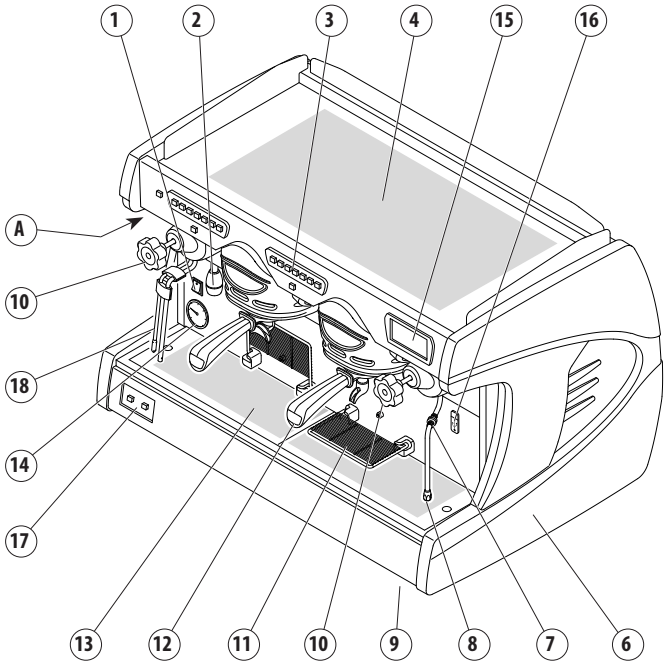

Figure A

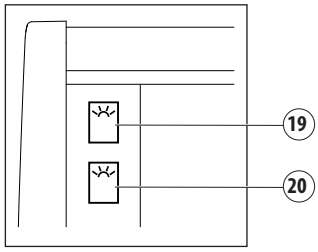

2.6 Internal components

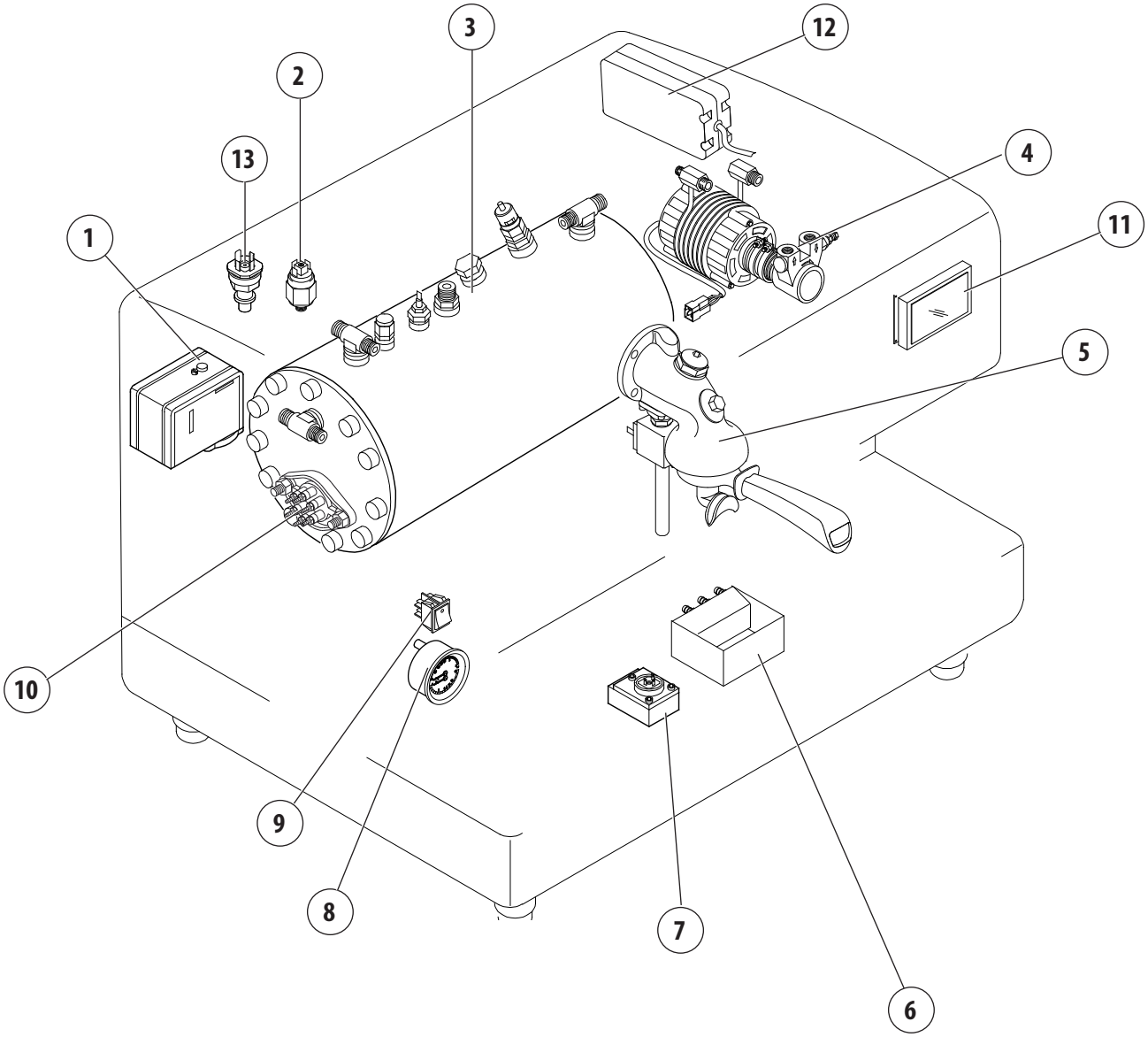

1. Pressure switch (SAE)
2. Safety pressure switch (SAE DISPLAY)
3. Steam heating unit
4. Internal motor pump (if included)
5. Dispensing group
6. Drain tray
7. Volumetric dosing device
8. Motor pump/heating unit pressure gauge
9. ON switch
10. Electric heating element
11. Display (only for the SAE DISPLAY version)
12. Electronic control unit
13. Pressure transducer
    (only for the SAE DISPLAY version)

2.7 Front command push button panel

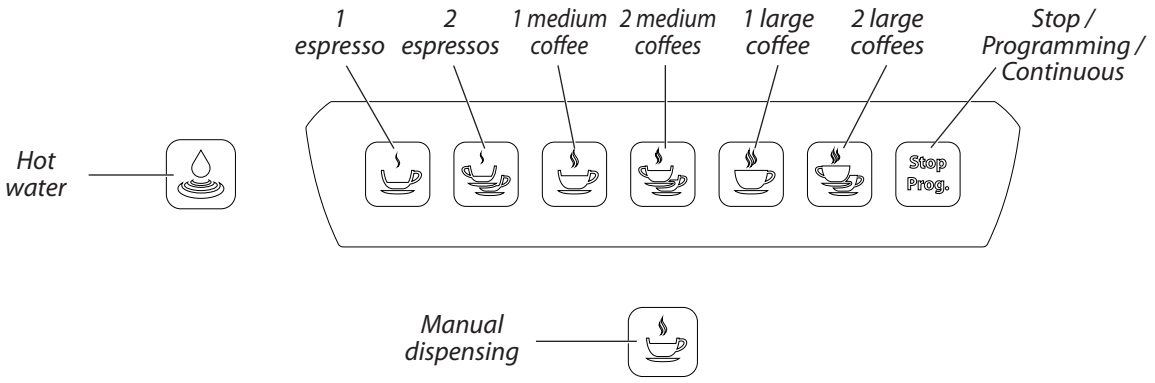

2.8 Steam wand push button panel

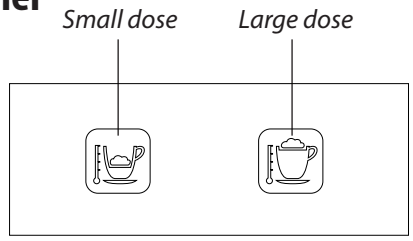

2.9 Warning indicators

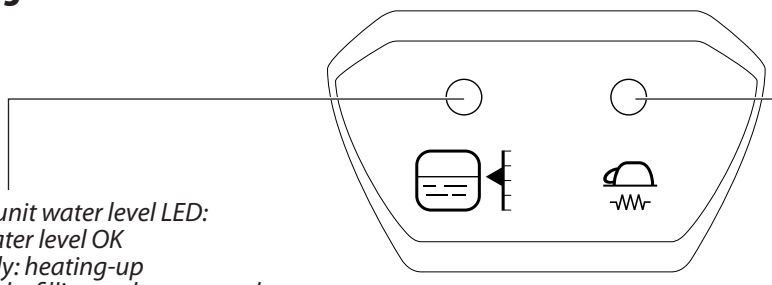

Heating unit water level LED:
- *Steadily lit: water level OK*
- *Flashing slowly: heating-up*
- *Flashing quickly: filling up has stopped*

Cup warmer LED
- *Lit: on*
- *Unlit: off*

2.10 Touchscreen display

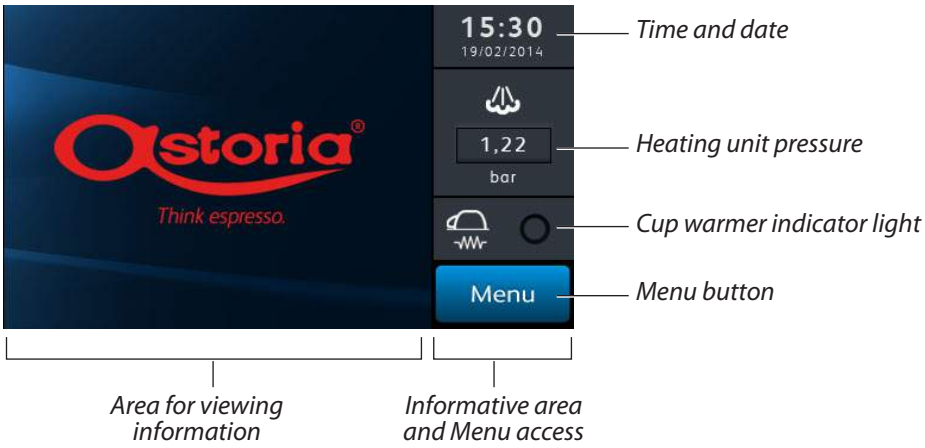

2.11 Data and marking

The machine's technical data is shown in the following table:

TECHNICAL DATA TABLE		2GR	3GR	4GR
Max. power	120 V	3100 W		
	230/400 V	3900 W	5600 W	6600 W
	240/415 V	4200 W	6000 W	7100 W
Frequency		50/60 Hz		
Heating unit		10,5/14 l	17/21 l	23 l
Safety valve calibration		0,19 MPa (1,9 bar)		
Heating unit operating pressure		0,08 - 0,14 MPa (0,8 - 1,4 bar)		
Mains water pressure		0,15 - 0,6 MPa MAX (1,5 - 6 bar MAX)		
Coffee dispensing pressure		0,8 - 0,9 MPa (8 - 9 bar)		
Working environment temperature		5 - 35°C 95° U.R.MAX		
Sound pressure level		< 70 dB		

According to Directive 2006/42/EC, the machine bears a CE marking, meaning that the Manufacturer declares, under his own responsibility, that the unit is safe for people and property.

The CE nameplate which provides the identification data is affixed to the base of the frame, under the drain tray. Below is an example of a nameplate:

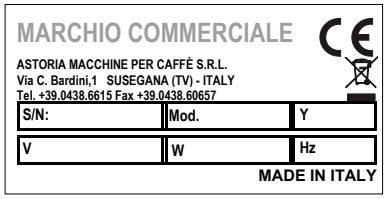

For any communication with the Manufacturer, always note the following information:

- S/N - machine serial number;
- Mod. - machine model
- Y - date of manufacture;

The data of the appliance can be seen also on the label located on the package of the machine.

IT is forbidden to remove or damage the nameplate. If this occurs, replace it as a matter of urgency, dealing exclusively through the Manufacturer.

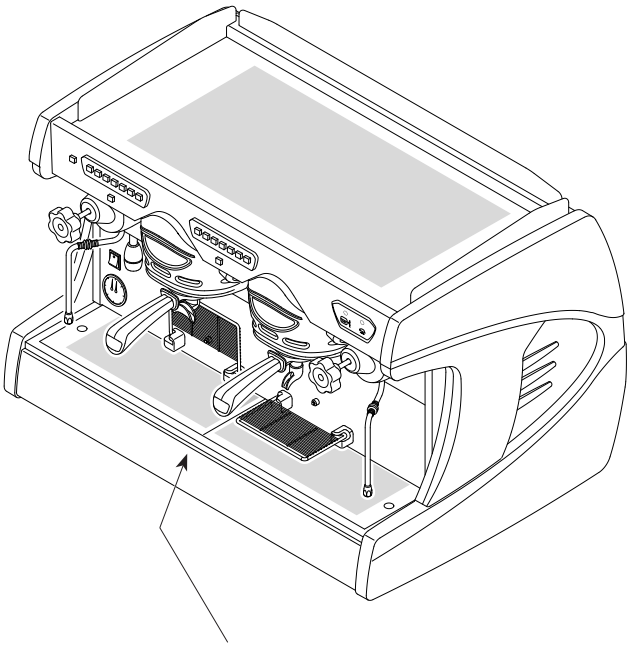

The CE label is affixed to the base of the frame under the drain tray.

ENGLISH

2.11.1 Steam heating unit

The heating unit is made of copper sheet metal (1). The heat exchangers are assembled onto this unit and are in turn connected to the dispensing group. The water used for dispensing coffee is taken directly from the heat exchanger. During the dispensing process, cold water is sent inside the exchanger by means of the motor pump. Cold water and the pre-existing hot water are mixed together inside the heat exchanger, in order to obtain the optimal water temperature for coffee infusion.

The heating unit is electrically heated by an electric heating element immersed in the water (2).

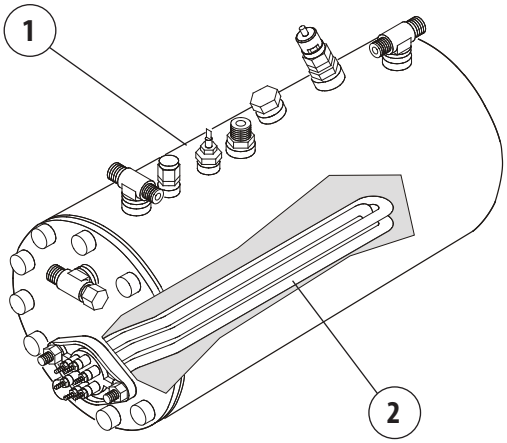

2.11.2 Overflow device

The cover installed on the pressure relief valve makes it possible to collect any water and steam which may leak from the heating unit due to a malfunction and channel it to the drain tray, via a special hose.

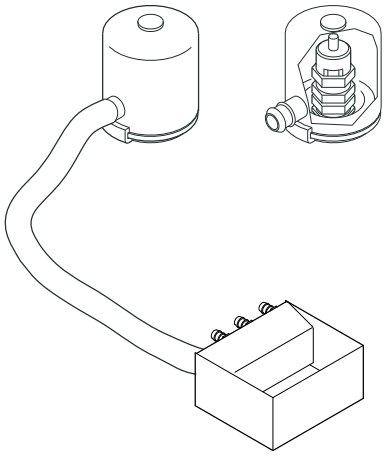

2.11.3 Pressure relief safety valve

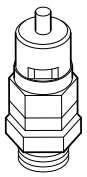

The pressure relief safety valve has a calibration of 1.9 bar in order to ensure that the pressure in the steam heating unit does not exceed 2.1 bar. Should a fault occur, the capacity of the valve is such as to be able to eliminate all the excess pressure in the heating unit.

The safety valve should be checked regularly as indicated in Chap. "8.3 Maintenance" on page 46.

Two safety valves are installed on all machines with 4 groups.

2.11.4 Expansion valve + check valve

This is a valve consisting of an expansion valve and a check valve.

- **Expansion valve** (**A**):
  the cold water sent from the pump to the heat exchangers is heated. This heating causes an increase in the volume of water. To limit pressure increases in the hydraulic circuit, the valve limits the maximum internal pressure of the circuit to 12 Bar.
- **Check valve** (**B**):
  its function is to prevent the water from back-flowing into the exchangers in the hydraulic circuit.

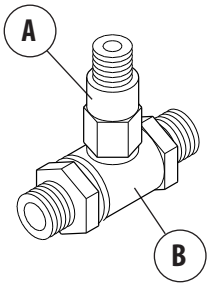

2.11.5 Negative pressure valve

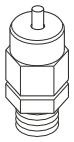

The purpose of the negative pressure valve is to prevent liquids from back-flowing through the steam nozzle when they are being heated. Furthermore, the excess air inside the heating unit is removed during the machine's heating phase.

2.11.6 Pressure switch

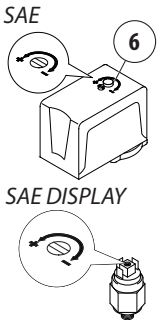

The pressure switch makes it possible to control the heating unit pressure by activating or bypassing the heating element in the heating unit. Any pressure switch calibration can be carried out with the machine in operation by turning the screw (**6**) located on the body of the component (SAE) or inside (SAE DISPLAY).

2.11.7 CTS group (with a thermosiphonic circuit)

In this system, the dispensing group (**1**) is heated by a thermosiphonic circuit (**2**) connected to the heat exchanger (**3**). The same water is used when dispensing coffee which ensures that all coffees are the same temperature:

- The activation of the solenoid valve and the pump allows cold water to enter the exchanger (**3**) through the injector (**4**);
- The heating unit water is carried from the exchanger (**3**) to the group (**4**) for dispensing;
- The pump allows the water flow pressure to increase to 8-9 bar for dispensing.

The injector (4) and the flow reducer (5) are important components for the dispensing group's operation. To increase the coffee extraction temperature, remove the flow reducer (5) or replace it with one that has a bigger diameter. To decrease the temperature, replace it with one that has a smaller diameter. If necessary, the exchangers can be replaced by removing the flange and disconnecting the relative hydraulic circuit pipes. These operations should be carried out when the machine has been switched off and has cooled down: always replace the seals.

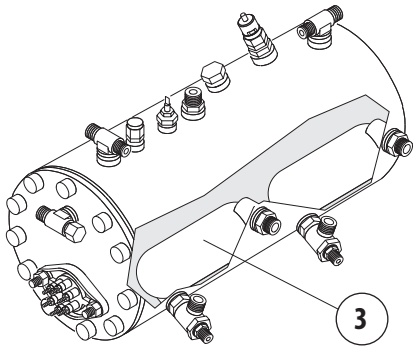

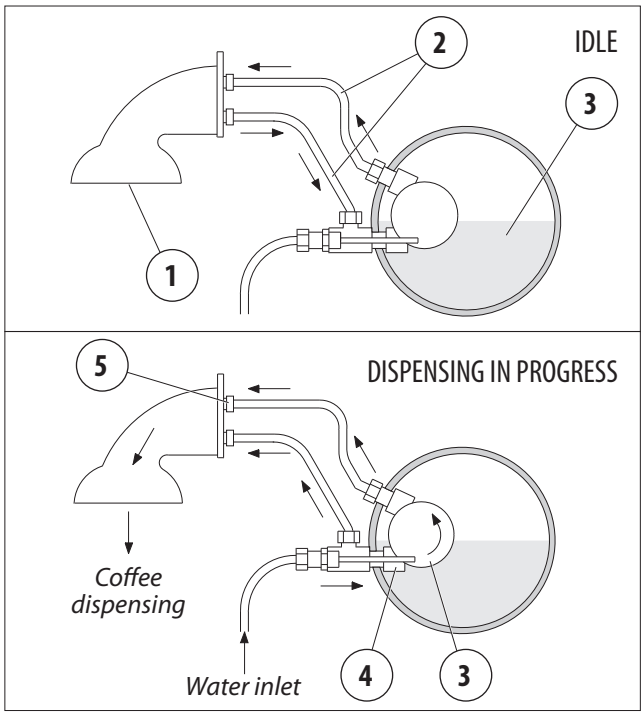

2.11.8 Group with an EXTRACTABLE exchanger

The dispensing group heating is provided by direct contact with the heating unit. The water used to dispense coffee is taken from a so-called "extractable" exchanger which is immersed in the heating unit's water:

- When the solenoid valve and pump activate, this allows cold water to enter into the exchanger (**1**).
- The heating unit water is carried from the exchanger (**1**) to the group (**2**) for dispensing;
- The pump allows the water flow pressure to increase to 8-9 bar.

The version of the extractable exchanger for the Italian market does not include the suction hose (**3**) and seal (**4**).

If necessary, the exchanger can be replaced without having to remove the flange: loosen the screws, remove the dispensing group from the heating unit and remove the exchanger. These operations should be carried out when the machine has been switched off and has cooled down: always replace the seals.

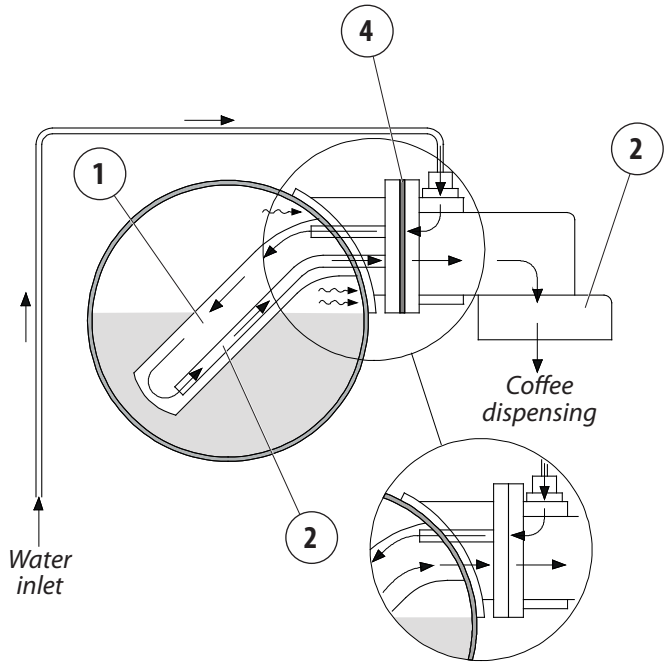

ENGLISH

2.11.9 Safety thermostat

The thermostat prevents any damage occurring to the electrical heating element if there is no water in the heating unit. The thermostat bulb (**7**) is located inside a sheath (**8**) in the middle of the heating elements. The thermostat contacts (**9**) are connected to the electric heating element (**10**). If the electric heating element is exposed due to a failure to fill the heating unit with water, the temperature of the heating element increases dramatically. At this point, the thermostat cuts the power supply to the heating element in order to prevent damage occurring.

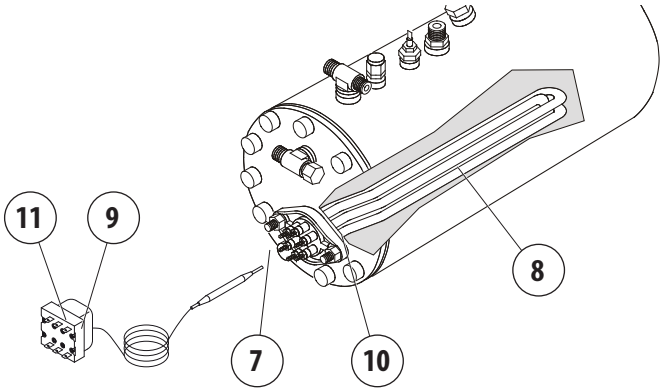

To reset the thermostat, press the centre button (11). However, before starting the machine up again, identify what prevented the water from being fed into the heating unit.

2.11.10 Motor pump

THIS is a component that feeds the machine, by raising the water pressure to 8 - 9 bar in order to dispense coffee and automatically fill the heating unit.

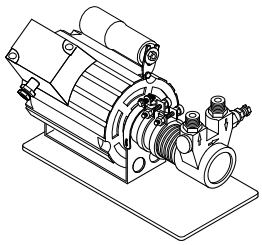

2.11.11 Electronic control unit

The electronic control unit (2) is the machine's "brain", since it monitors and controls the appliance's full operation.

The information concerning the installed software (date and version) can be seen on the display when the machine is turned on.

When the machine turns on, it performs a functional test and reports information regarding the installed software:

REV. SV: XXX

2.11.12 Automatic Water Entry

The Automatic Water Entry system is designed to check the water level of the heating unit. It consists of:

- A probe inserted into the heating unit (**1**), composed of a stainless steel rod;
- An electronic control unit (**2**);
- A hydraulic circuit with a solenoid valve controlled by the regulator.

The electronic control unit controls the level of water in the heating unit. When the level of water in the heating unit drops, the contact with the probe is interrupted. The control unit sends an impulse to the inlet solenoid valve and the motor pump, which are then activated until the normal level of water in the heating unit has been restored.

To avoid any flooding caused by machine malfunctions or water leaks in the circuit, the electronic control unit has a "Timeout" feature which cuts off the automatic water filling function after a certain time (2 minutes). When installing machines with three or four groups, the initial water filling time may exceed the established timeout limit. Should this occur, simply turn the machine off and then back on to restore normal operating conditions.

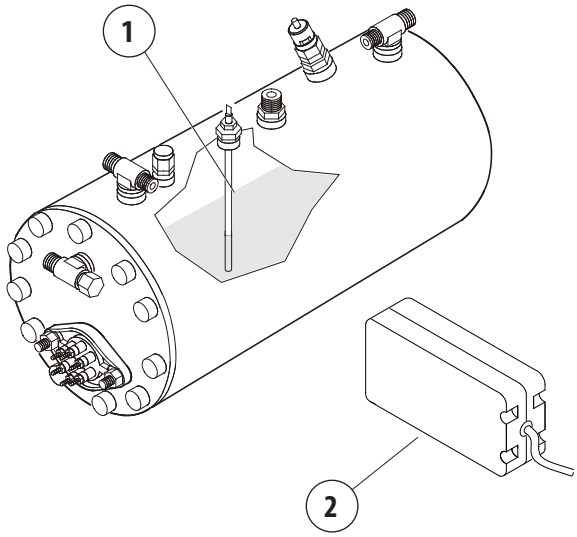

2.11.13 Volumetric dosing

The volumetric dosing device measures the quantity of water sent to the group in order to dispense coffee.

The dispenser generates electrical impulses which are sent to the electronic control unit.

These impulses are read by the control unit and counted while the dose is being programmed.

The intermittent flashing of the LED (**X**) indicates the electrical pulse sent to the control unit by the dosing device.

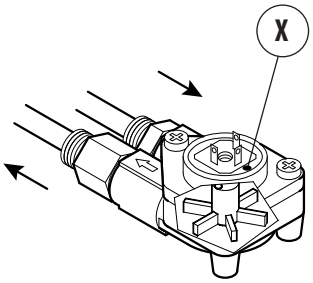

2.11.14 Electronic push button panels

The electronic push button panels allow the coffee doses to be selected and programmed. They are connected to the electronic control unit.

To use and programme these, please consult the user manual.

2.11.15 Cup warmer

The cup warmer device (1) warms the cups before they are used.

THE temperature can be adjusted by following the instructions in the user manual.

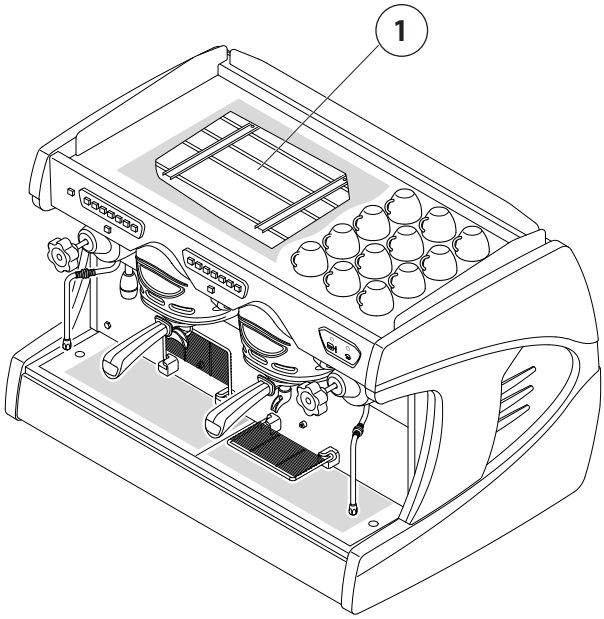

2.11.16 Water filter

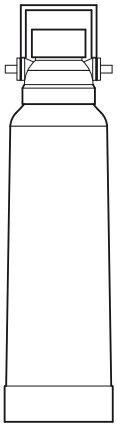

In the mains water, non-soluble salts are present which cause limestone to form in the heating unit and other parts of the machine.

Drinking water can also contain heavy metals and substances, such as chlorine which are harmful to health.

The filter makes it possible to eliminate or substantially reduce the presence of these mineral salts.

The cartridge contained in the water filter must be replaced at the frequency specified by the manufacturer.

To use and maintain the water filter, follow the instructions provided in para. 8.4 on page 50.

2.11.17 Water softener

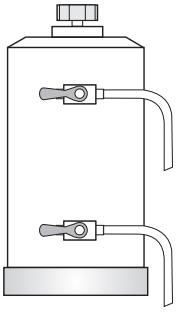

The resin softener can be used as an alternative to the water filter.

This component has the property of retaining the calcium contained in the water. For this reason, the resins become saturated after a certain period and must be regenerated with coarse kitchen salt (NaCl, sodium chloride) or special water softening salt. It is very important to regenerate the softener within the established times. However, in locations where the water is very hard, it will be need to be regenerated more frequently. The same rule can be applied to locations where there is a large consumption of hot water (for tea, etc.).

To use and regenerate the water softener, follow the instructions provided in para. 8.5 on page 52.

2.11.18 Hot water spout

The hot water spout is connected to a heating unit suction hose. Depending on the model, hot water can be dispensed in two ways:

- Manually: by turning the adjustment knob on the front of the machine;
- Automatically: by selecting a button connected to a solenoid valve.

ENGLISH

2.11.19 Steam nozzle

The steam nozzle is connected to the top of the heating unit. Adjust the dispensing setting by turning the knob on the front of the machine.

2.11.20 Cappuccino maker (optional)

The cappuccino maker can be installed as an optional extra directly onto the tap. This device can both heat and froth the milk. To adjust and clean the cappuccino maker, follow the instructions in the user manual.

Using the appropriate fitting, attach the cappuccino maker directly to the steam nozzle, by replacing the original sprayer. Otherwise, attach it via the appropriate hose, directly onto the machine's steam valve.

Ensure that the sealing gasket (**1**) is present and if so, use Teflon tape in order to prevent any steam loss which could negatively effect the cappuccino maker's operation.

Insert the milk suction hose (**3**) into the cappuccino maker's appropriate coupling (**2**).

To change the temperature of the milk, attach the reducers as shown in the table below.

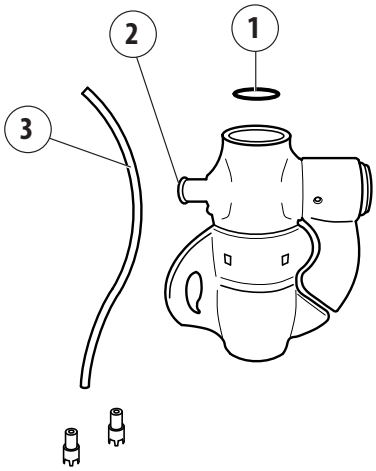

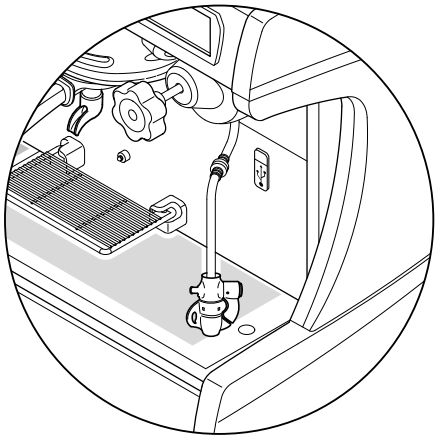

Table of temperatures with and without reducers (temperatures measured in a pre-heated cup)

Milk temperature	Not using a reducer	With a WHITE reducer that has a 1.9 mm diameter	With a RED reducer that has a 1.8 mm diameter
16°C room temperature	55 - 60°C	60 - 68°C	68 - 75°C
6°C chilled milk	48 - 56°C	58 - 63°C	63 - 70°C

2.11.21 Steam wand (optional)

This system can be used for automatically heating and foaming milk at the programmed temperature.

The operating principle is listed below:

- Press the specific button (**1**), located on the left side of the machine's base;
- The solenoid valve opens (**2**) which consequently allows the steam to flow from the heating unit to the steam wand nozzle;
- The system simultaneously activates the air suction pump (**6**) which is controlled by the control unit (**3**) and powered by the transformer (**7**). The milk froth can be adjusted by changing the amount of air intake when opening the valve (**5**);
- After the air has passed through the non-return valve (**4**), it mixes with the steam in the mixing interface (**10**);
- Steam comes out of the nozzle (**8**);
- The probe (**9**) that is connected to the machine's electronic control unit, detects the temperature of the milk while it is being heated;
- Once the set milk temperature has been reached, the electronic system stops the air and steam from being dispensed.

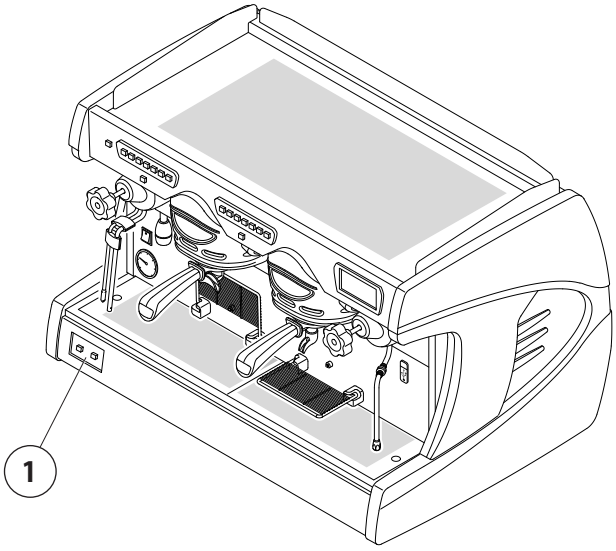

To adjust the milk temperature and froth, see para. 6.7 on page 30.

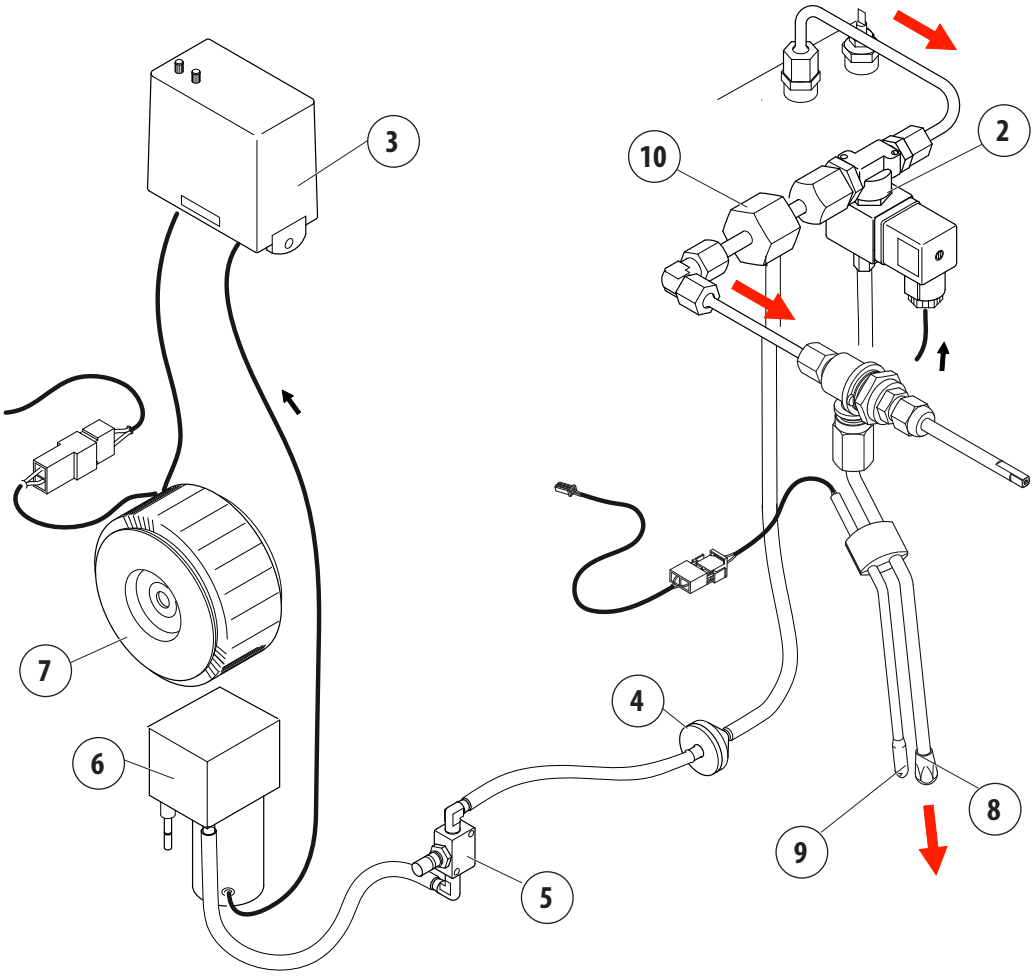

3. TRANSPORT AND HANDLING

3.1 Safety precautions

Carefully read the instructions provided in chapter "I. SAFETY PRECAUTIONS" on page 3.

3.2 PPE features

When transporting the machine, the following PPE is required:

	The use of protective gloves is mandatory
	The use of safety shoes is mandatory

3.3 Size and weight

MODEL	2GR	3GR	4GR
Width (W)	835 mm	1075 mm	1315 mm
Depth (D)	582 mm	582 mm	582 mm
Height (H)	582 mm	582 mm	582 mm
Maximum gross weight	97 kg	119 kg	141 kg

3.4 Handling the packed machine

Upon arrival, the machine must be unloaded and handled with care, carefully following the instructions on the packaging, or those contained in this Manual.

If there is an external motor pump (optional), the motor and the pump are supplied in a separate package.

It is very important to check that the maximum load capacity of each piece of lifting equipment is at least equal to the weight of the loads to be lifted, to which must be added the safety margins which are required by current standards.

3.5 Unpacking the machine

Only remove the machine from its packaging when it is ready to be installed, in order to prevent accidental collisions which could damage it:

- Open the packaging, taking care not to damage the machine;
- Remove and take out the machine guards and equipment inside the packaging;
- Remove the machine;
- Dispose of the packaging in compliance with waste regulations.

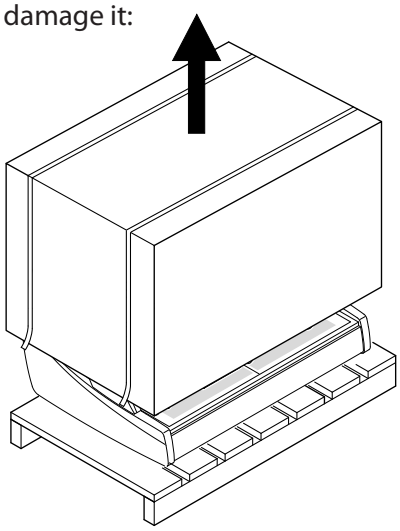

After unpacking the machine, check that there are no damaged parts due to transport or missing parts. Should there be any, immediately inform (no later than 7 days after delivery) the CARRIER and MANUFACTURER, communicating the machine data and providing photographic evidence:

We recommend that you keep the packaging until the guarantee has expired.

Wood, nails, staples, cardboard: non-polluting material which must be recycled properly.

Plastic: polluting material that must not be burned (danger of toxic fumes), nor disposed of as normal waste; to be disposed of according to current regulations.

4. STORAGE

4.1 Overview

In the waiting period prior to installation, the machine must be stored by the Manufacturer or an Authorised Distributor.

4.2 Storing the machine after operation

If the machine is not used after a certain period of time, store it in the following conditions:

- Disconnect the machine from the water and power mains;
- Empty all the internal circuits of water.

Store the machine taking the following precautions:

- Store in a closed environment;
- Protect it from shocks and stresses;
- Avoid contact with corrosive substances.

The machine was designed and built to operate in environments with the following characteristics:

- Room temperature: +5°C - +35°C
- Max. relative humidity: 50% (at 40°C)

Any variation in these characteristics may decrease the average life of some of the machine's components. Typical examples:

- Room temperature: premature degrading of the motors.
- Relative humidity: premature degrading of seals and electronics.

If the environmental features are significantly different from those listed, contact the MANUFACTURER before they become a source of problems.

Before starting the machine up after it has been placed in storage, the equipment must be fully inspected.

5. INSTALLATION

5.1 Safety precautions

Carefully read the instructions provided in chapter "I. SAFETY PRECAUTIONS" on page 3.

When all of the installation operations have not been carried out by a Qualified Technician, use of the machine may result in serious damage to the appliance and people.

If any work is carried out on the machine electronics when the machine is still live, any guarantee will automatically be invalidated.

5.2 PPE features

When installing the machine, the following PPE is required:

	The use of protective gloves is mandatory
	The use of eye protection is mandatory
	The use of safety shoes is mandatory

5.3 Environmental conditions

5.3.1 Room temperature

The electrical and electronic equipment that has been installed on the machine, has been designed and made to function properly in environments where the temperature is between +5 and +35°C.

5.3.2 Relative humidity

The electrical and electronic equipment that has been installed on the machine, has been designed and made to function properly in environments where the relative humidity does not exceed 50% at a temperature of 40°C, or 90% at a temperature of 20°C.

5.3.3 Altitude

The altitude of the installation site must not exceed 2000 m.

ENGLISH

5.4 Installation and operation spaces

Before the machine arrives, a suitable environment must be prepared:

- The appliance is not suitable for installation in an area where a water jet may be used;
- The machine is not suitable for outdoor use;
- The machine must not be used inside a kitchen;
- The selected room and space must be appropriate for the machine type of use and operation;
- Lighting must be adequate in accordance with current regulations;
- The grounding system must comply with current regulations;
- The electrical system must comply with current regulations.

5.5 Support base

To ensure a sufficient degree of ergonomics and machine safety, a support base with the following features must be made available (reference drawings on the next page):

- Ensure that there is sufficient space for the machine to be positioned and used correctly;
- The worktop (**1**) must be comfortable and able to withstand the machine's weight. The height of the upper section of the machine (**15**) must be at least 150 cm from the floor;
- The base must be perfectly level and have no irregularities;
- The terminals for connecting to the water mains (**11**) and electrical mains (**8**) must be in the immediate vicinity of the support base;
- If the machine is positioned next to a wall, ensure that there is a gap of at least 20 cm between the machine and the wall (**3**);
- Fit a drawer under the worktop (**15**) which will be used to deposit used coffee grounds and if possible, fit a rubber support as well (**16**) to knock the filter holder against.
- Place the motor pump in an area that is close to the support base, protected from moisture and far enough away that it cannot be accidentally touched by the operator.

In order to work properly and ensure safety, the machine must rest on a perfectly horizontal surface.

Any machine alignment adjustments must be done by adjusting the feet (7).

If the machine is installed in moving environments (trains, ships, etc.), special anchor pins must be used on the support base, which are available from the manufacturer.

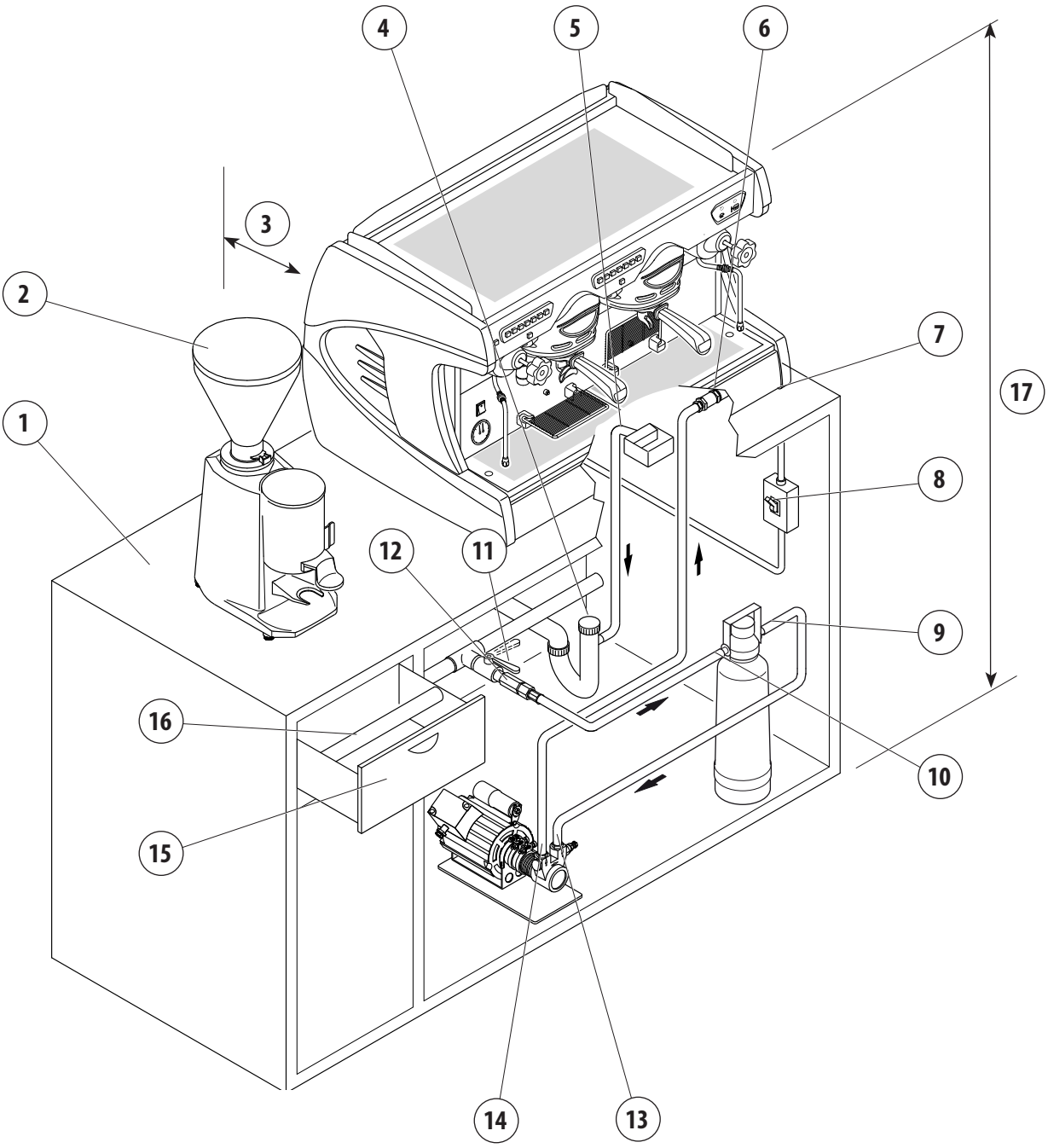

1. Support base
2. Grinder-dispenser
3. 20 cm minimum distance between the machine and the wall
4. Sewer drain
5. Drain tray
6. Water mains inlet
7. Adjustable feet of the machine
8. Electrical mains switch
9. Water filter inlet
10. Water filter outlet
11. Water mains tap
12. Water mains check valve
13. Motor pump inlet
14. Motor pump outlet
15. Drawer for depositing used coffee grounds
16. Support for knocking out the grounds in the filter holder
17. The minimum height of the machine top from the floor must be 150 cm

5.6 Drilling the support base

If it is necessary to drill holes into the support base in order to pass through the water inlet and outlet hoses, as well as the power supply cables, follow the directions shown in the drawings below.

.

2 GROUPS

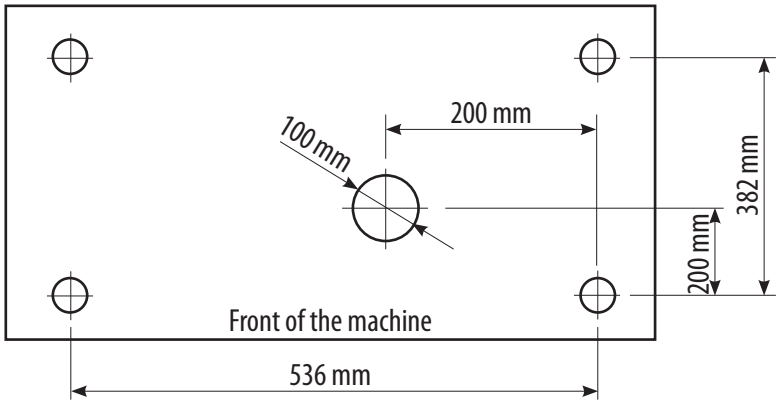

3 GROUPS

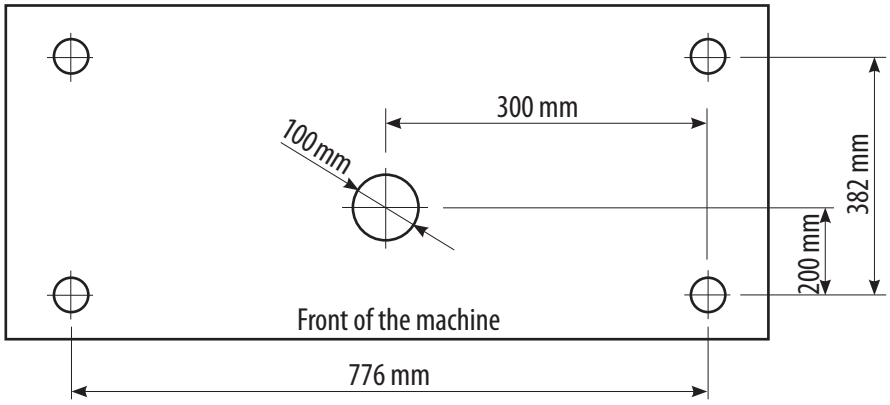

4 GROUPS

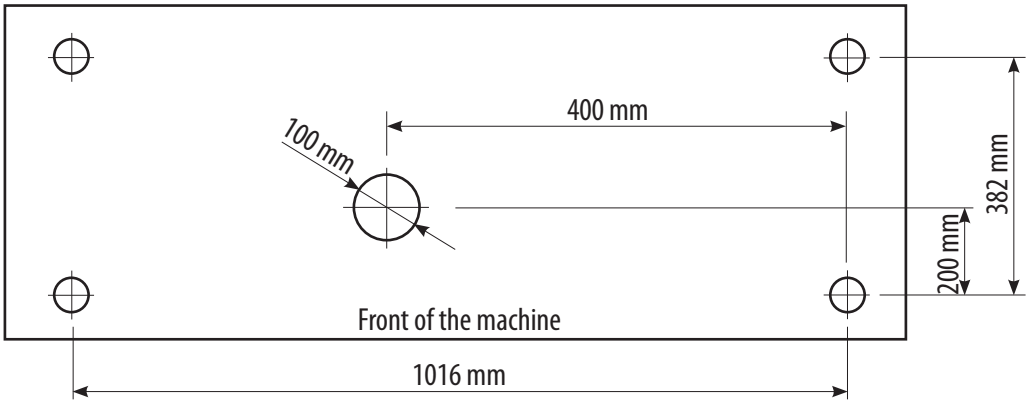

5.7 Hydraulic connection

5.7.1 Water supply

The appliance's water supply must provide water which is suitable for human consumption, and must conform with the regulations in force in the place of installation. The owner/ manager of the system must give confirmation to the installer that the water meets the above requirements:

5.7.2 Materials to be used

When installing the appliance, only the components and materials supplied with the appliance are to be used. Should the use of other components be necessary, the installer must verify if they are suitable for coming into contact with water used for human consumption.

5.7.3 Hydraulic connections

The installer must carry out the hydraulic connections in accordance with the hygiene norms and the hydraulic safety norms for environmental protection in force in the place of installation.

1. Add a tap to the water supply in order to stop water from flowing to the machine;
2. In order to prevent damage, it is advisable to install the water purification filter where it will be protected from accidental blows;
3. If there is no water purification filter (**9**) and/or motor pump (**13**), connect the water mains (**11**) directly to the machine's water inlet (**6**);
4. When connecting the machine's tray (**5**) to the sewer drain (**4**), avoid overly tight curves or kinks, and make sure that there is sufficient inclination for water to flow to the drain;
5. The drain must be connected to a siphon that can be inspected and periodically cleaned, in order to prevent unpleasant odours from returning;
6. To avoid oxidisation building up and damage to the machine over time, do not use iron connections for the hydraulic system, even if they are galvanised.

After installation and before using the machine, the water in the hydraulic circuits must be replaced, as indicated in para. 7.7, on page 29.

For every new installation, to use new pipes of connection. Don't use the old pipes of connection.

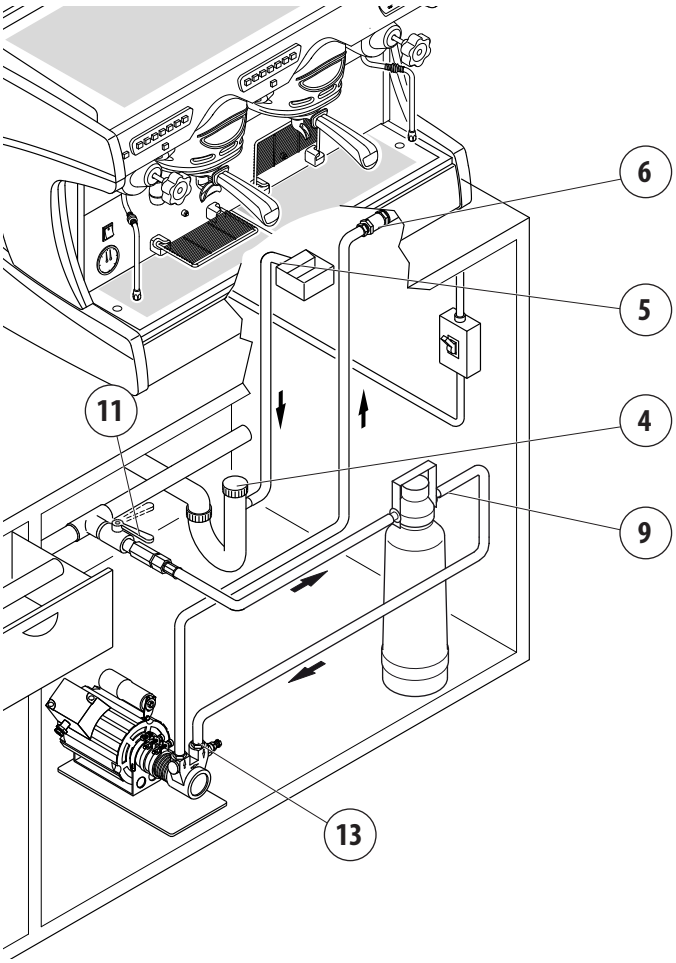

The water mains must provide cold water fit for human consumption (potable water) at a pressure between 0.15 and 0.6 MPa (1. 5 and 6 bar). If the pressure is higher than 0.6 MPa (6 bar), connect a pressure reducer before the pump.
All the filling couplings are 3/8 male gas types. The drain tray is connected to a pipe with an internal diameter of 20 mm.
If an external tank is used, the connection pipe between the machine and the tank must not exceed 150 cm.
The machines are fitted with a "Timeout" device which allows the heating unit to be filled up with water within a maximum time. This function prevents water from flowing out of the heating unit's valve (flooding) and keeps the motor pump from overheating.

ENGLISH

FOR THE EUROPEAN COMMUNITY: when connecting to a water mains or an external tank, a non-return valve (12) must be positioned upstream from the machine, as set forth by the EN 1717 standard.

FOR THE USA - The water connections and drains must be made in accordance with the 2003 International Plumbing Code of the International Code Council (ICC), or the 2003 Uniformed Hydraulic Code of the IAPMO. The machine must be installed with a suitable non-return valve as set forth by the national standards.

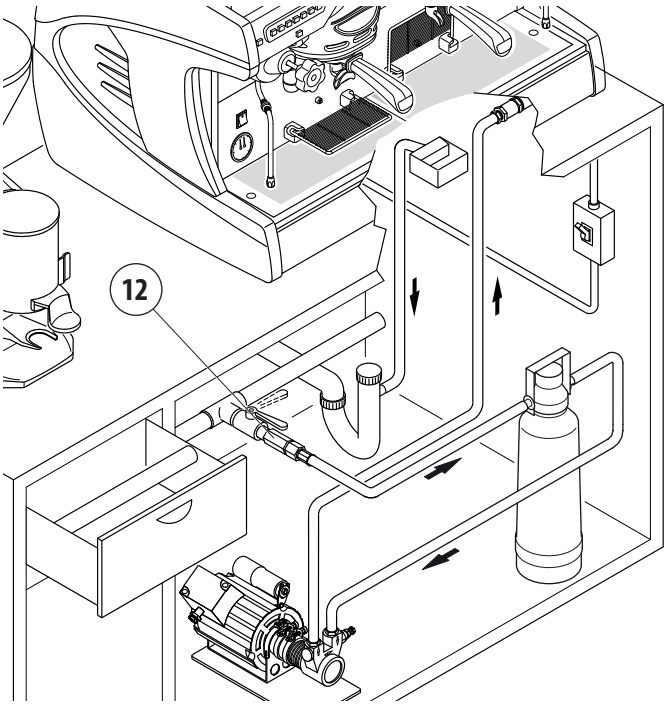

5.8 Electrical connection

- The installation must be carried out in accordance with the safety standards in force in the country of installation. The owner/ manager of the system must give confirmation to the installer that the electrical system meets the above requirements.
- Install a main safety switch (**8**) as set forth by the current safety regulations regarding rated power.

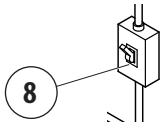

- To connect the machine to the electricity distribution system, refer to Chap. "14. WIRING DIAGRAMS" on page 60.
- Do not use power extensions or electrical adaptors for multiple outlets. If their use is absolutely necessary, use only simple adapters and extensions which comply with current safety standards. Never exceed the capacity indicated on the simple adaptor or extensions, and the maximum power indicated on the adaptor.
- The access spaces to the machine and main switch must be left clear, in order to allow the user to intervene without any constrictions and leave the area immediately when needed.

If an external motor pump is being used, proceed as follows:

- Connect the motor pump cable (the smaller cross section) to the connector of the external motor as shown in the diagram below;
- Connect the machine's power cable (the bigger cross section).

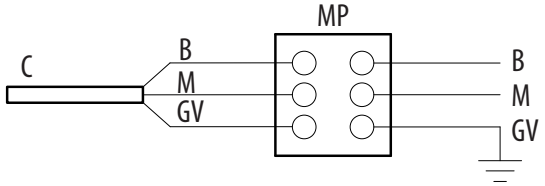

B	Blu
C	Cavo alimentazione motopompa
GV	Giallo-verde
M	Marrone
MP	Morsetto motopompa

Always connect the motor pump cable before the machine power supply cable, by following the diagram provided. Failure to comply with the instructions given above may cause serious damage to the machine and/or motor pump and will invalidate any guarantee.

We recommend that you promptly report any problems encountered during the installation of the appliance to the Manufacturer.

The electric system must be equipped with a suitable 30 mA residual-current device (RCD).

We recommend that you promptly report any problems encountered during the appliance's installation to the Manufacturer.

For Australia - When connecting the appliance to the mains, a device must be provided for which ensures an omnipolar disconnection from the mains with a contact opening distance in the conditions of overvoltage category III and in accordance with the AS/NZS 3000 regulations.

6. COMMISSIONING

6.1 Safety precautions

Carefully read the instructions provided in chapter "I. SAFETY PRECAUTIONS" on page 3.

6.2 Preparing the filter holders

6.2.1 Filter holders

- Place the filter-holding spring (**2**) in the housing of the filter holder (**1**).
- Take the one-cup (**3**) or two-cup filter (**4**) and press it firmly into the filter holder.

6.2.2 Spouts

To finish preparing the filter holder, fit the one-cup (**5**) or two-cup (**6**) spouts.

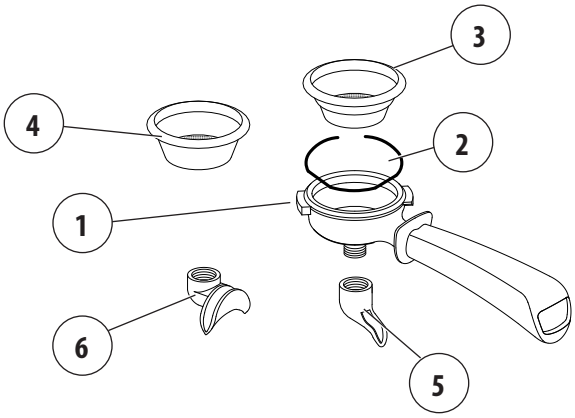

Properly connect the single filter with the single spout and the double filter with the double spout.

6.3 Coffee grind

To adjust the coarseness of the ground coffee, use the appropriate regulator located on the grinder-dispenser hopper.

6.4 Adjusting the external motor pump

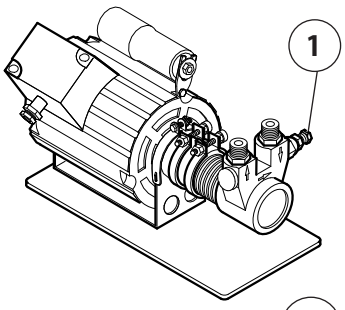

- To adjust the operating pressure, proceed as follows:
- Press a coffee dispensing switch;
- Adjust the pressure by turning the screw located on the pump (**1**) so as to obtain a value between 8 and 9 bar: tightening the screw increases the pressure, and loosening it reduces the pressure. Check the pressure via the pressure gauge (**2**) located on the front of the machine, or via the display (**3**) if there is one;
- Switch off the dispensing switch.

6.5 Raised cup grilles

When using cups with different heights, the special flippable grilles (**11**) that are supplied with the machine can be used.

To use the grille, unhook it from the latch and rotate it into a horizontal position.

When it is no longer needed, push it upwards, until it latches into place.

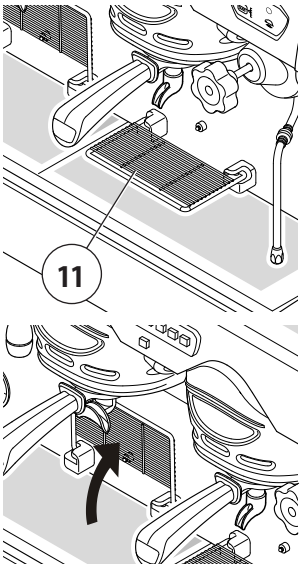

ENGLISH

6.6 Lighting

6.6.1 Dispensing compartment

To turn the machine's compartment lighting on and off, press the switch (**20**) located at the front under the front control panel on the left side.

6.6.2 Side panels

To turn the side panel lighting on and off, press the switch (**19**) located at the back under the front control panel on the left side.

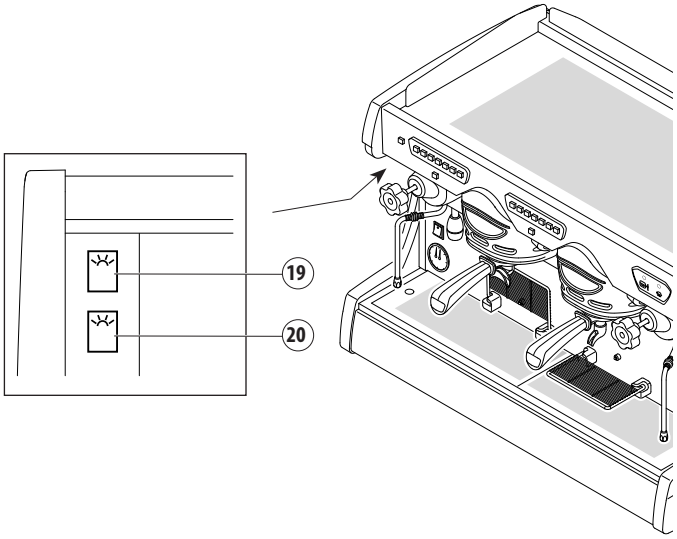

6.7 Steam wand

6.7.1 Temperature adjustment

To programme the temperature of the milk to be heated, see para. "7.1.4 Steam wand option" on page 36. However, we recommend that this does not exceed 60°C.

6.7.2 Milk froth adjustment

To increase or decrease the froth consistency, proceed as follows:

1 - Remove the machine's left side panel
2 - Slightly turn the specific regulator (**X**):
- clockwise, to reduce the froth
- anti-clockwise, to increase the froth

3 - Reposition the machine's side panel

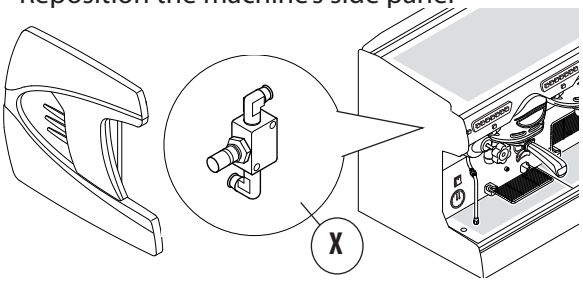

6.8 Turning the machine on and off

6.8.1 Turning on the SAE version

Proceed as follows:

- After the hydraulic and electrical mains have been connected, make sure that the drain tray (3) under the cup holder grille is correctly connected to the drain.

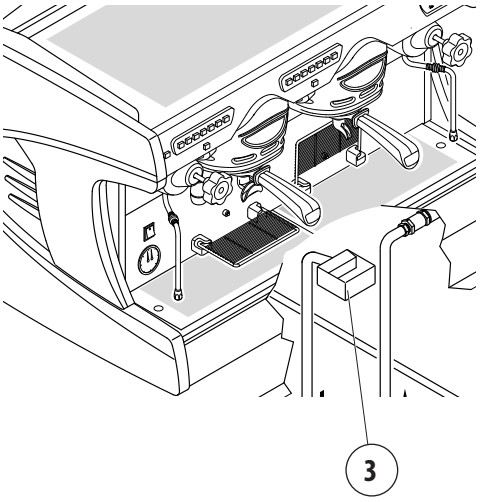

- Check that all the steam valves are closed.
- Open the water tap of the water mains and the softener.
- Turn the main power switch (**1**) to the ON position, the heating unit water level indicator will start to flash (**2**);
- Wait for the heating unit to automatically fill with water: the water level indicator will remain lit (**2**).

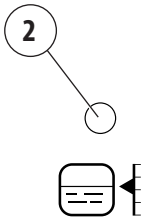

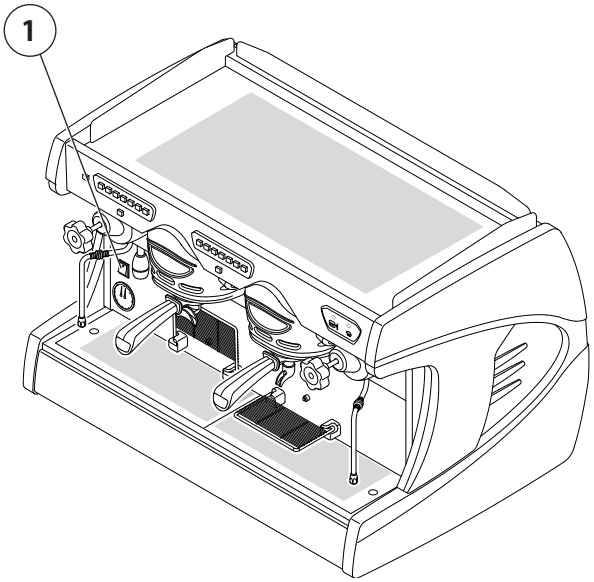

6.8.2 Turning on the SAE DISPLAY version

After the hydraulic and electrical mains have been connected, make sure that the drain tray (**3**) under the cup holder grille is correctly connected to the drain.

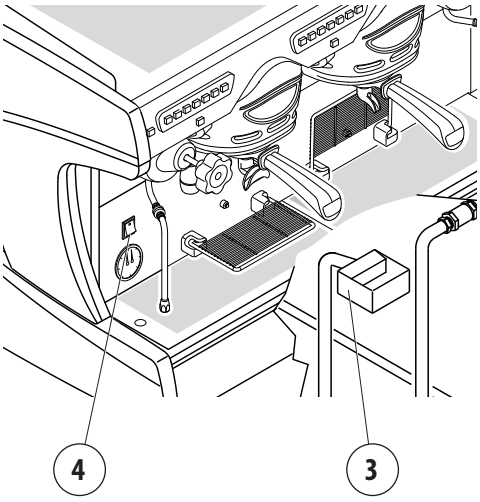

Check that all the steam valves are closed. Turn on the machine using the main switch (**4**) and follow the indications on the machine's display.

When the machine turns on, it performs a functional test and reports information regarding the installed software:

REV. SV: XXX

- OK indicates that the machine is working correctly. If there is a negative result, check the warning on the display;

TEST
-OK-

- When the machine is turned on, the motor pump is activated which starts to fill the steam heating unit and the water heaters for the coffee (there are the same amount of these as there are dispensing groups in the machine);

FILLING UP
WATER FOR COFFEE

- In order to remove the air from the heaters, each time the machine is turned on, the group solenoid valves are activated, making water and steam come out of the shower screen of each group for around 10 seconds;

CAUTION
WATER/STEAM OUTLET

- When the heating phase of the dispensing groups has finished (after about 10 minutes), signalled by the "PLEASE WAIT" warning disappearing, it will be possible to make coffee selections. The steam heating unit needs to fully heat up before hot water or steam can be dispensed;

- During the heating phase of the steam heating unit (from 95°C to 98°C), the machine will dispense a small amount of water and steam from the water spout;
- Steam and water can only be dispensed, i.e. the machine can only be fully functional, if the pressure of the machine ( ) is higher than 0.6 bar.

During the steam heating unit heating phase, the temperature instead of the pressure will be shown on the display in °C, until it reaches 100°C.

Then the value will be converted into bars (pressure).

During the machine's heating-up phase (roughly 20 minutes), the negative pressure valve will release steam for a few seconds until the valve closes.

ENGLISH

6.8.3 Turning the machine off

Turn off the machine using the main switch (**4**).

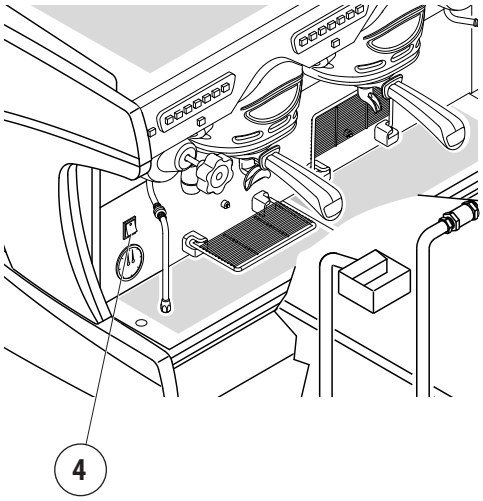

6.9 Water renewal

When the machine is being installed, the Qualified Technician must replace the water inside the hydraulic circuits by following these steps:

- When the installation is complete, the appliance must be started, brought to nominal working condition and left in the "ready-to-operate" status for 30 minutes;
- Next, the appliance has to be turned off and fully emptied of the first water introduced into the entire hydraulic circuit, in order to eliminate any initial impurities;
- Then, the appliance must be filled with water and brought to the nominal working conditions;
- Upon reaching the "ready-to-operate" status, the following dispensing operations must be performed:
  - Continually dispense from each coffee group, in order to empty at least 0.5 litres from the coffee circuit. If there are several dispensing points for the same exchanger/ coffee heating unit, divide the volume by the number of dispensing points;
  - Empty the heating unit of all its hot water (6 litres for 2GR, 8 litres for 3GR, 1 litres for 4GR), by continually dispensing from the appropriate nozzle. If there are multiple dispensing points, divide the volume by the number of dispensing points;
  - Continuously release steam for at least 1 minute from each steam dispensing point.

If the machine remains inactive for longer than a week, the Qualified Technician must renew 100% of the water inside the hydraulic circuits, as indicated above.

- **Before using the machine, carry out some empty dispensing cycles with the filter holders attached for several seconds, in order to release any air inside the circuit and in turn, allow the dispensing groups to fully heat up;**
- **Before using the machine, dispense a few coffees to test the grind fineness and to check the operating pressure of the machine;**
- **Do not remove the filter holder from the dispensing group when coffee is being dispensed.**

7. SAE - DISPLAY MACHINE PROGRAMMING

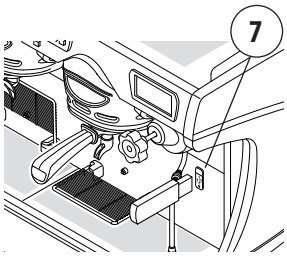

Various machine functions can be set up in the programming mode.

To access the machine's programming mode, insert the USB stick into the programming reader (7).

The USB stick exclusively provided to the Qualified Technicians is the only stick that can be used in the USB port. Do not connect external devices (iPhones, iPads, PCs, etc.) to the USB port because it could create serious machine software problems.

With the USB stick inserted, the "Menu" button updates like the figure on the right.

Press the "Menu" button and the main programming menu will appear on the display.

All the machine programming operations are carried out using the touchscreen display.

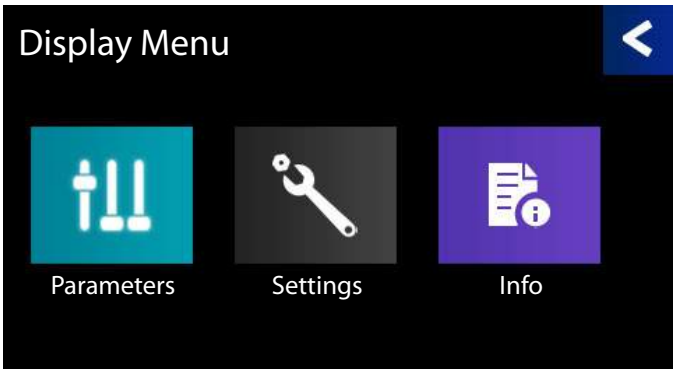

To exit the menu, or return to the previous screen press the (<) button.

ENGLISH

OUTLINE OF THE MACHINE'S PROGRAMMING MODE

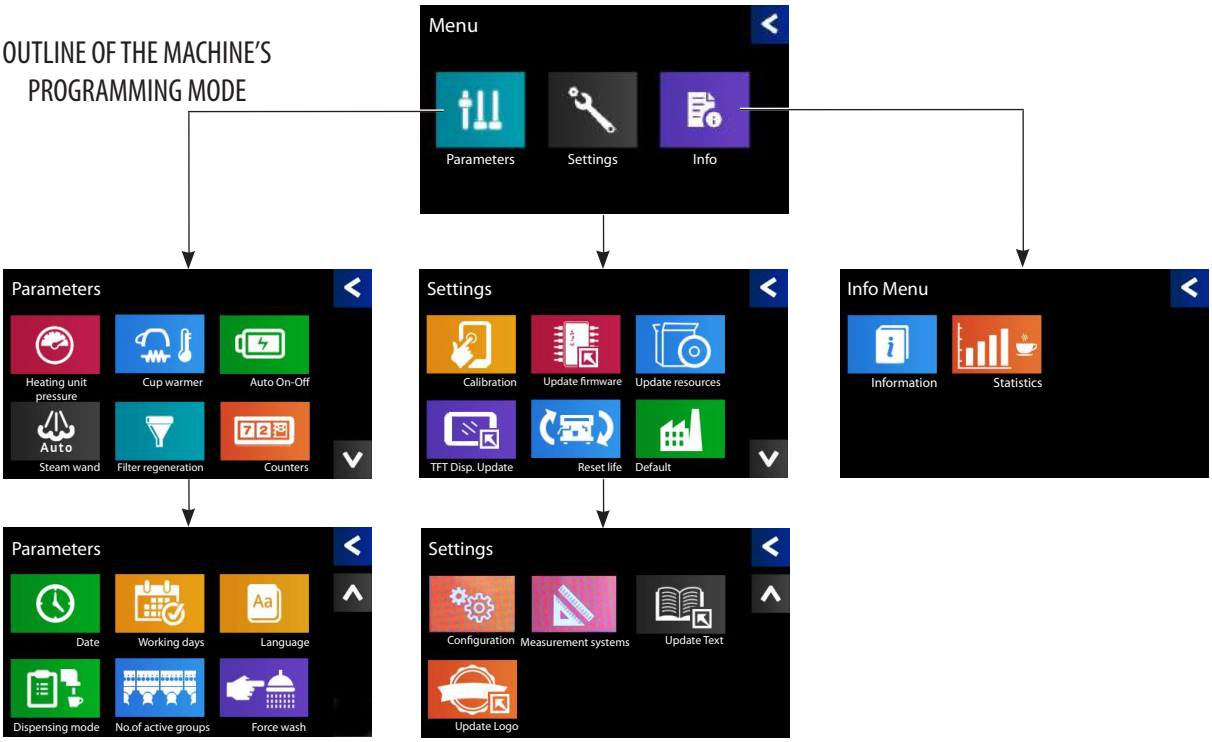

7.1 Parameters

Press the button on the main menu to access the screens shown below.

P. 1

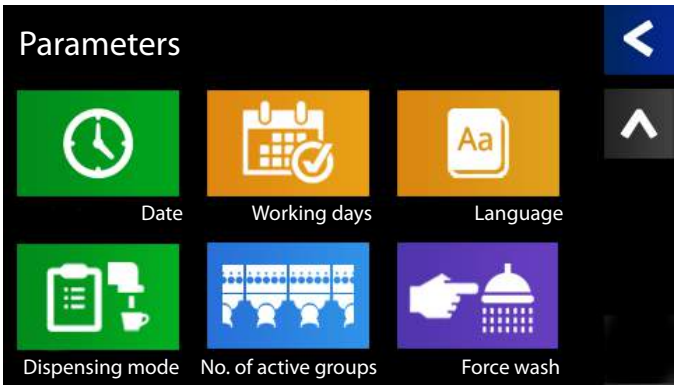

P. 2

7.1.1 Adjusting the heating unit pressure

To change the pressure in the steam heating unit (hot water/steam), proceed as follows:

- Press the button;
- Adjust the parameters via the scroll bar until it approaches the desired value;
- Use the + and - buttons for greater precision;

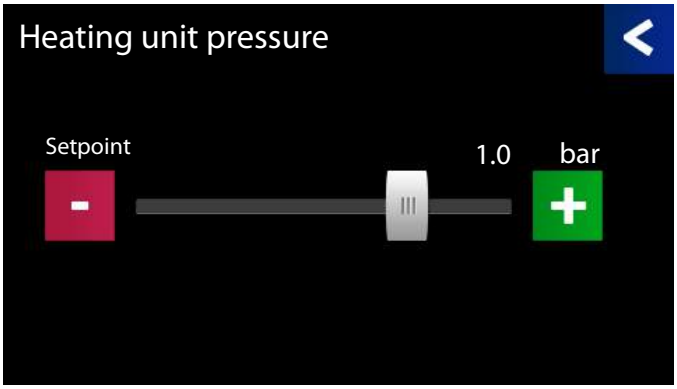

- **The default pressure of the machine is 1 bar, which is perfect for a normal workload. Depending on how the machine is used, the pressure can be increased or decreased. Coffee dispensing is not affected by this parameter;**
- **If the "steam wand" device has been installed, we recommend that you leave the pressure at 1 bar.**

7.1.2 Adjusting the cup warmer temperature

To change the cup warmer temperature, proceed as follows:

- Press the  button;

  Cup warmer

- Adjust the parameters via the scroll bar until it approaches the desired value;
- Use the + and - buttons for greater precision;

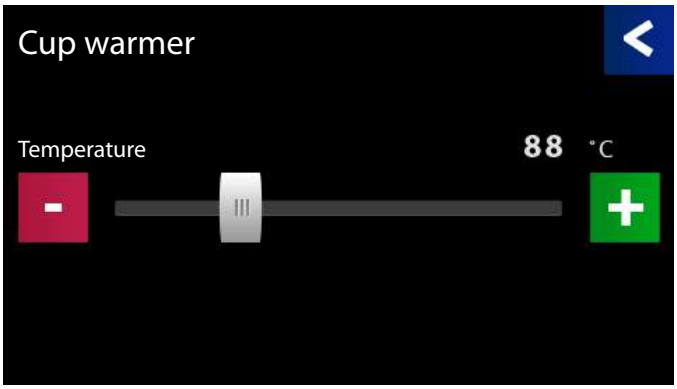

Temperature	Cup warmer temperature

- **If a temperature above 114°C is set, the "ON" warning will appear on the display, resulting in the cup warmer's continuous operation function being enabled.**
- **If a temperature less than 70°C is set, the "---" warning will appear on the display, resulting in the cup warmer being deactivated. If the cup warmer is deactivated by the technician, the user will not be able to activate it via the ( ) button on the main screen.**

7.1.3 Auto On-Off programming

The Auto On-Off function allows you to set a start-up and switch-off time for the machine. To activate this, proceed as follows:

- Press the  button;

  Auto On-Off

- Press "Yes" to activate the On-Off function
- Programme the activation times:

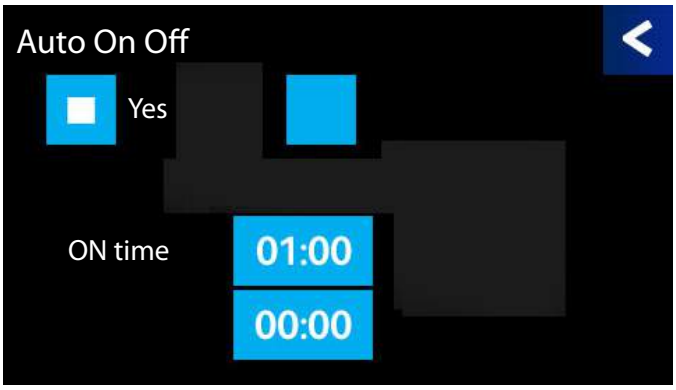

ON time	Controls the time when the machine turns on
OFF time	Controls the time when the machine turns off

THE different time periods can be changed by pressing the box you would like to modify and adjusting the hour and minutes.

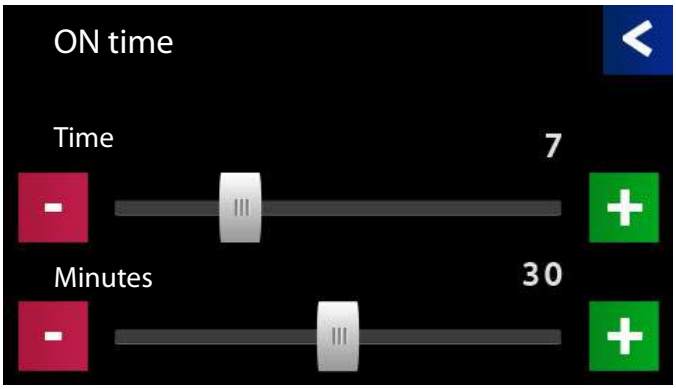

- **If you do not want to activate the "Auto On-Off" function, select No.**

ENGLISH

7.1.4 Steam wand option

To enable or disable the steam wand and adjust its temperature, proceed as follows:

- Press the 

button;

Steam wand

If enabled, you can set the desired temperature (50 to 80°C) for each button of the Steam wand push button panel:

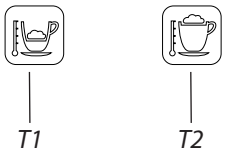

You will similarly be able to calibrate the steam wand, which allows the difference between the value read on the display and the real temperature to be adjusted.

7.1.5 Water softener regeneration

To automatically display the message indicating that the softener needs to be regenerated, proceed as follows:

- Press the  button;

Filter Regeneration

Set the number of litres used by the machine after which the message indicating that the softener should be regenerated will be shown

Litres used:
How many litres of water have been used since the last reset.

Litre threshold:
How many litres of water can be consumed before the softener regeneration message appears.

After the regeneration has been performed, set the litres to "000000" in order to cancel the warning as follows:

- Press the reset button ();
- In the next screen answer "Yes";
- The "Litres used" counter is reset to 0, and the "Filter Regeneration" message will disappear from the main screen.

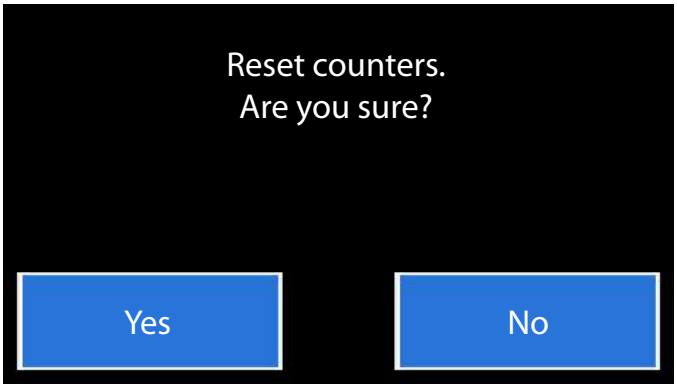

7.1.6 Viewing the counters

This menu option allows you to view the different information, which is useful for the technician to correctly identify any anomalies.

It also is a valuable tool for the user when carrying out scheduled maintenance.

Below is a list of the screens in this menu and a brief description of each of them:

- Press the  button;

Counters

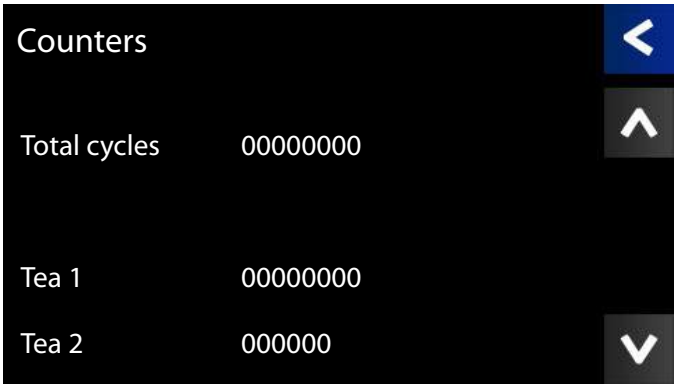

The first screen shows the total number of coffee selections performed by the machine.

The following screens display information about the counters of the various groups.

In the next screen, the last 8 warnings stored by the machine are shown. For further information, refer to the "Settings menu" chapter.

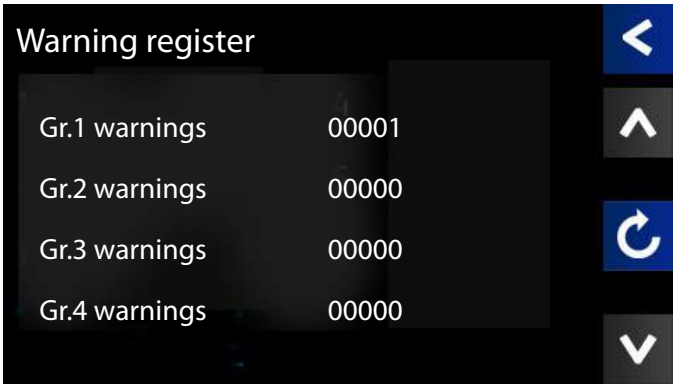

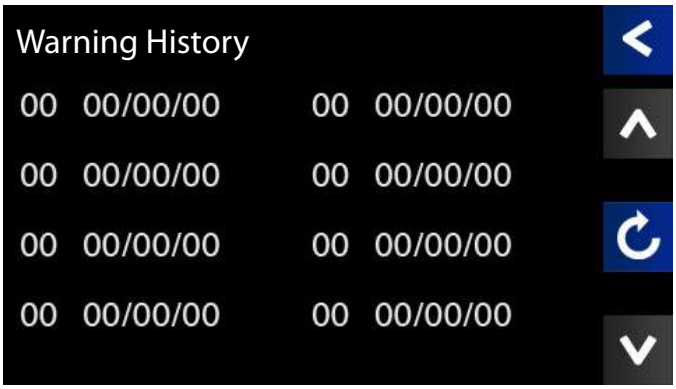

On this screen, the partial counters for every dispensed beverage can be viewed.

Press one of the buttons on the push button panel

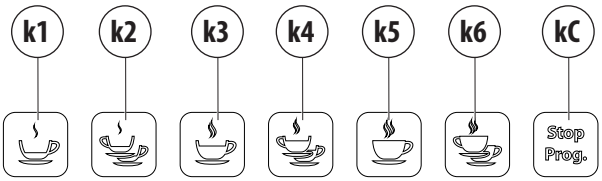

and the dispensing group in question will be shown, in addition to the selection count (e.g. 1 espresso).

ENGLISH

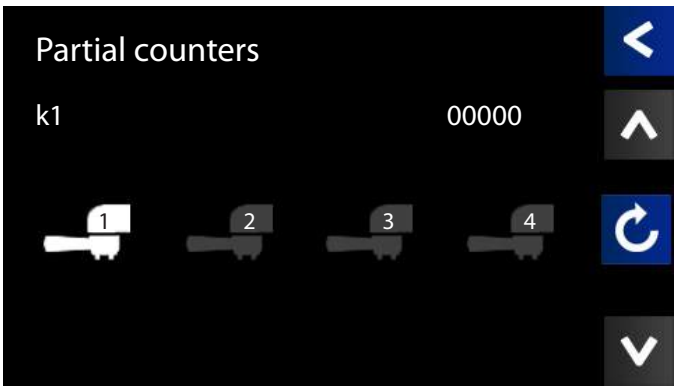

To reset the counters, proceed as follows:

- Press the reset button ( );
- In the next screen answer "Yes";
- All of the counters will be reset.

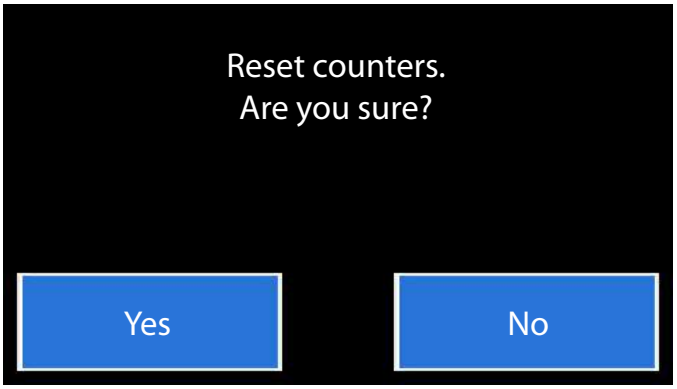

7.1.7 Setting the date

To set the time and date shown on the display, proceed as follows:

- Press the  button;

Date

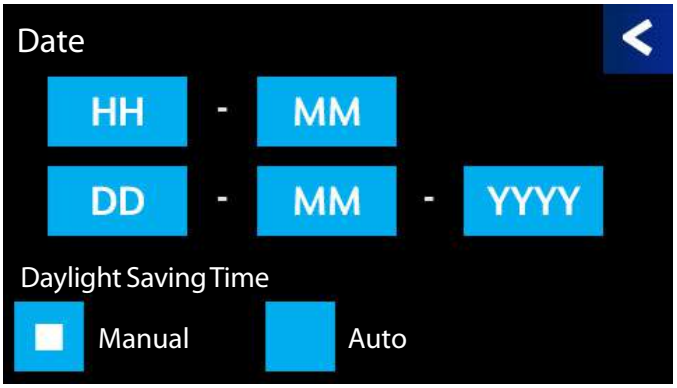

Press the desired field to adjust the time and date.

HH	hours
MM	minutes
DD	day
MM	month
YYYY	year

Auto	The clock automatically switches from standard time to daylight saving time and vice versa.
Manual	The time does not change from standard time to daylight saving time and vice versa.

7.1.8 Setting the working days

To programme when the machine turns on and off, proceed as follows:

- Press the  button;

Working days

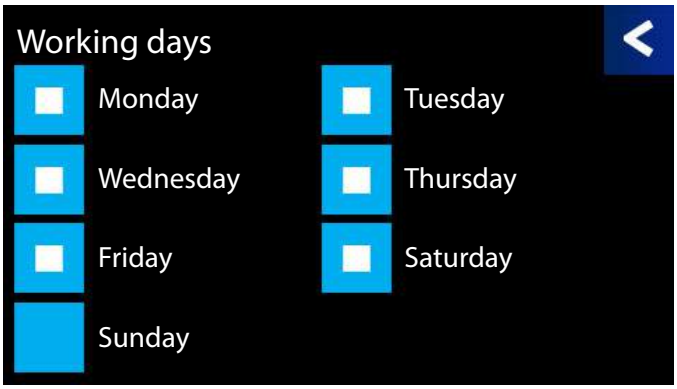

An example of the machine being switched off on a Sunday is provided above.

The machine remains switched off on the days of the week that have been disabled.

7.1.9 Setting the language

To set the language shown on the display, proceed as follows:

- Press the 

button;

Language

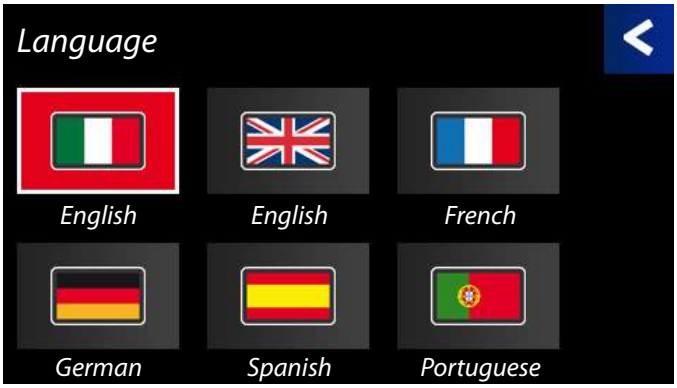

Select the language to use.

7.1.10 Dispensing check

To set the type of dispensing check, proceed as follows:

- Press the 
button;

Dispensing mode

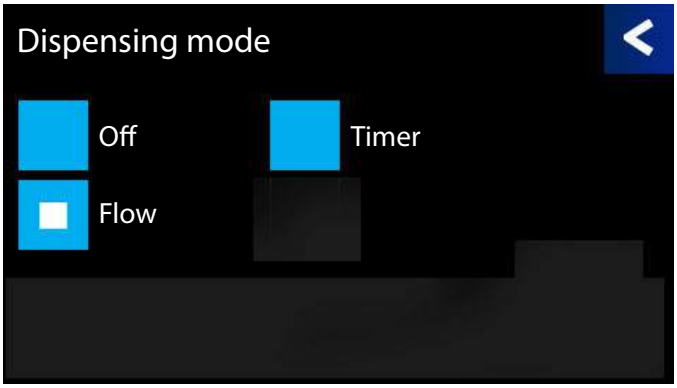

Select the mode you would like to appear on the screen while the coffee is being dispensed:

Off:

By setting "Off", the machine doesn't perform any checks whilst the machine is dispensing.

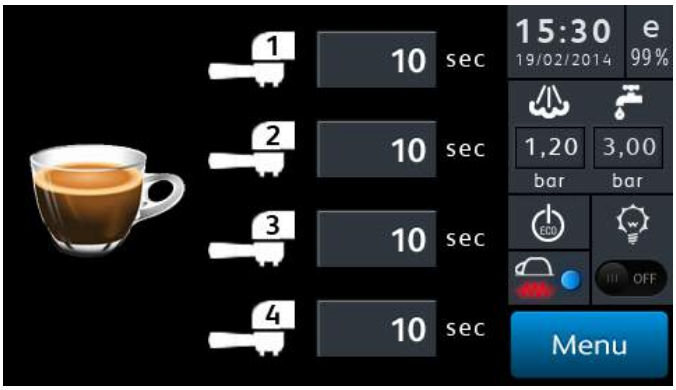

Timer:

During the dispensing process, the display will start scanning the time (in seconds) group by group.

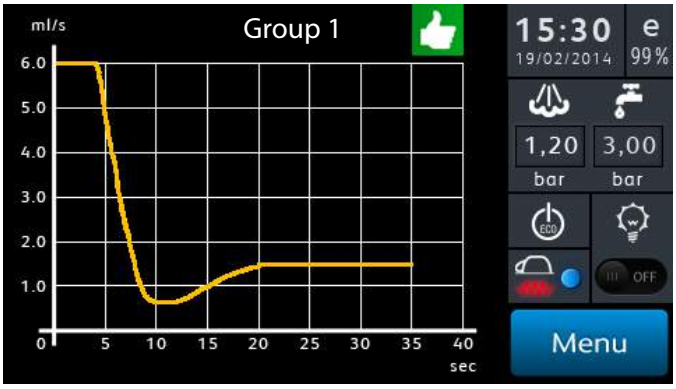

Flow:

When the coffee doses were last programmed, the system memorised the water flow during the dispensing process.

If the "flow mode" is activated, the dispenses are controlled by the system and are considered valid when the dispensing speed falls within the set tolerance. If the dispensing speed is too fast or too slow, the system will display a message suggesting that the fineness of the coffee grind is increased or decreased (see the table).

ENGLISH

WARNING LIGHT	DESCRIPTION
	The dispensing flow is too slow
	The dispensing flow is within the tolerance parameters
	The dispensing flow is too fast

By setting the "FLOW" mode, the machine will only check the coffee dose buttons. The flow of the "STOP/PROG" button, if used for dispensing, will not be checked.

7.1.11 Setting the number of active groups

This item lets you set the number of active groups that have been installed on the machine, as well as the serial number:

- Press the 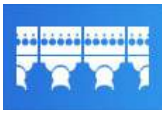 button;

No. of active groups

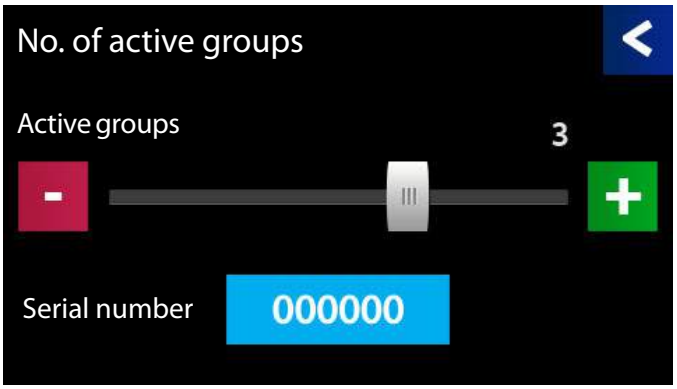

Set the number of groups installed on the machine.

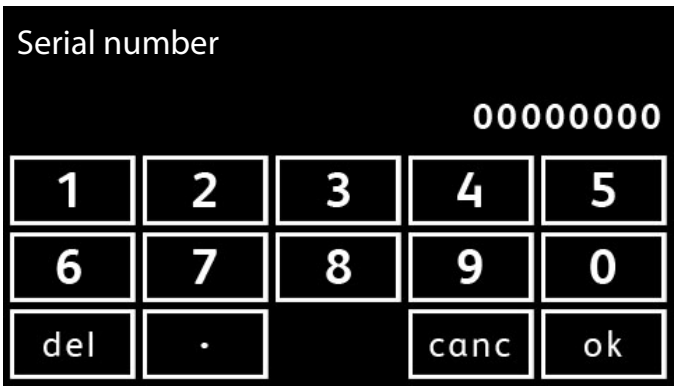

Press the serial number button to open the screen where the new number can be entered.

Enter the machine's serial number using the numbers on the touchscreen. If you enter an incorrect number, you can use the (**del**) button to delete the last digit.

After the number has been entered, press (**ok**) to confirm and return to the previous screen.

Press the (**canc**) button to return to the previous screen without making any changes.

The machine's serial number can only be programmed by a technician. The serial number can be reprogrammed at a later date.

7.1.12 Group wash

This item enables the automatic group wash:

- Press the 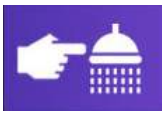 button;

Force wash

- Proceed as indicated in paragraphs 8.7.5 on page 56 and 8.7.6 on page 57.

7.2 Settings

Press the  button on the main menu to access the screens shown below.

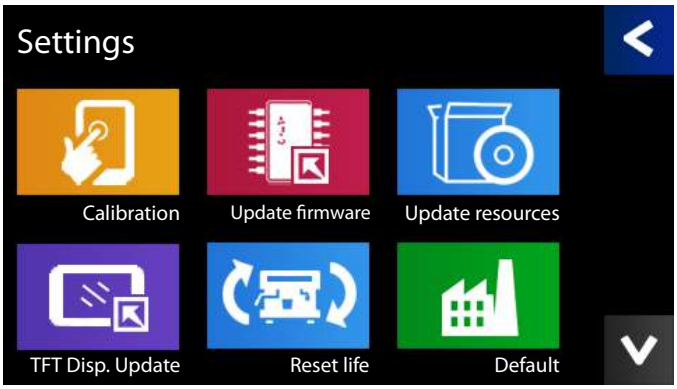

P. 1

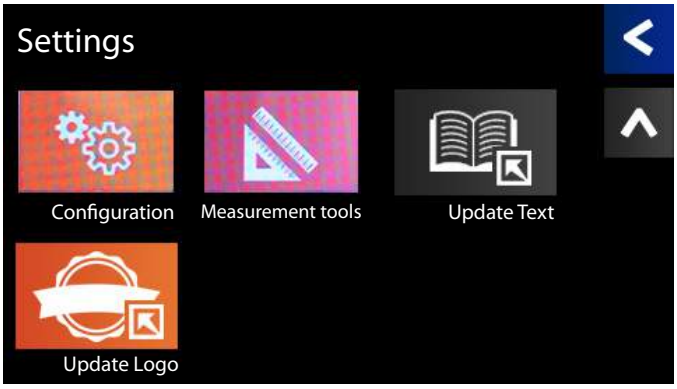

P. 2

7.2.1 Calibration


Calibration

This menu is the sole responsability of the manufacturer. Do not activate it, under any circumstances.

7.2.2 Update Firmware


Update firmware

The board's firmware can be updated via this menu.

7.2.3 Update Resources


Update resources

The display's graphics can be updated via this menu.

7.2.4 TFT display update


Update TFT Disp.

This item allows the software that manages the touchscreen display to be updated (via a USB stick), which is located in the display board.

To update, press this command, then the machine will load the new version of the display management software off the USB stick; once finished, check that the new version of the software has been installed.

7.2.5 Reset life


Reset life

Via this menu, you can reset all of the settings and data recorded in the device's memory.

Confirmation is required before the operation can be performed.

7.2.6 Default


Default

Through this menu, you can restore the machine's factory (default) settings.

Press the "Default" button to restore the data.

7.2.7 Configuration


Configuration

Various settings can be updated via this menu.

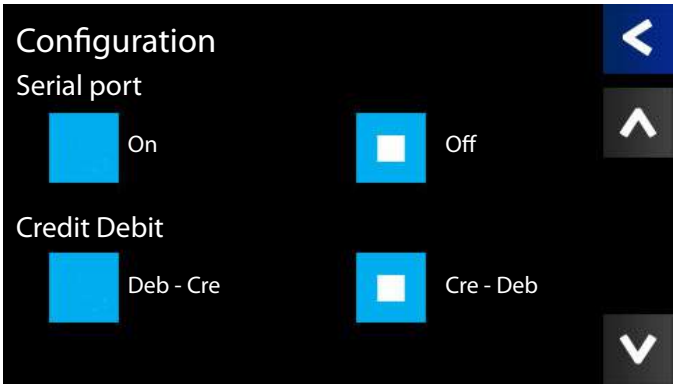

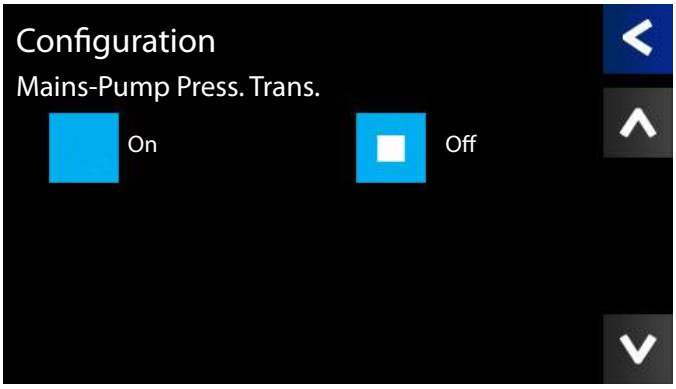

ENGLISH

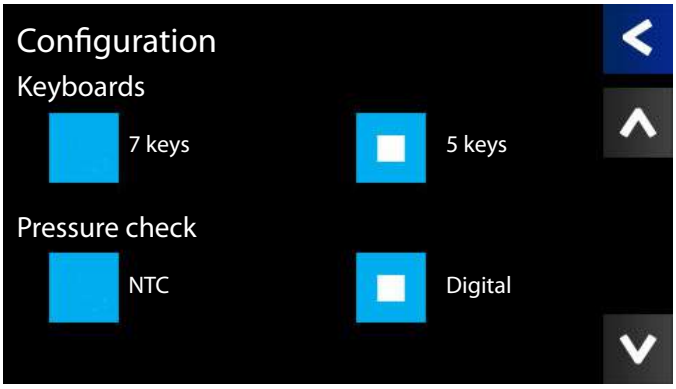

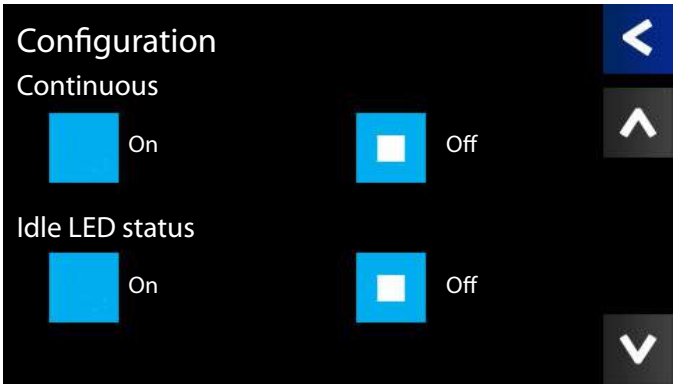

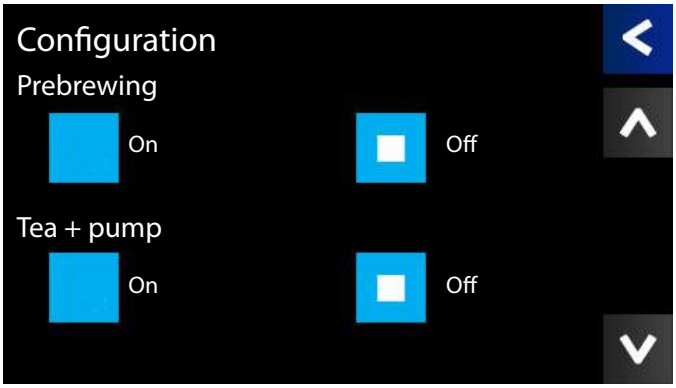

7.2.8 Measurement systems


Measurement systems

Via this menu, the unit of measurement used for the temperature can be changed from degrees Celsius to degrees Fahrenheit. The temperature is set to degrees Celsius by default.

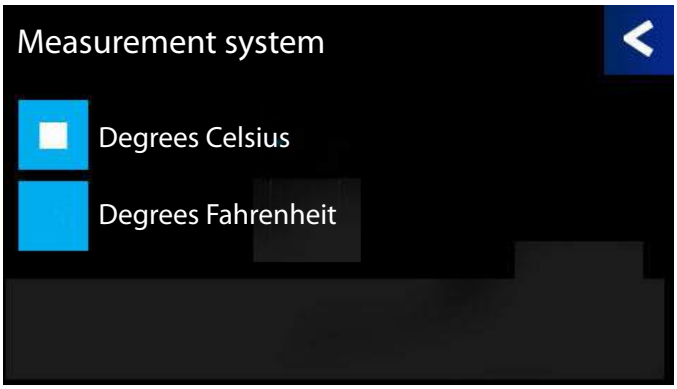

7.2.9 Update text


Update text

With this command you can update the text used in the display menu, in the various languages that are available.

To update, press this command, then the machine will load the new menu text.

Do not remove the USB stick while the update is in progress. If the operation fails, manually turn the machine off and back on and insert the USB stick that was supplied by the manufacturer.

7.2.10 Update Logo

Update Logo

With this command, you can customise your logo and the display screensaver.

Once the button has been pressed, the software will load the new pre-prepared logo, which is located on the USB stick.

The instructions for preparing the logo and screensaver are indicated below.

PREPARING THE LOGO

To install the new logo on the machine's display, the "custom.bin" file must be replaced with the new one containing the custom graphics. This file is located in the CUSTOM folder on the supplied USB stick.

To generate this file, use the special tool which is supplied and can be installed on any Windows-compatible computer.

HOW TO PROCEED:

- If you have not already done so, install the "Custom-Builder-Setup-v1-0-0-0.exe" build tool onto a PC;
- Once installed, launch the "CustomBuilder" software; the screen below will open:

- Click on the "browse" button under the left screen to load the new logo, then click "browse" again under the right screen to load the screensaver;

- When both graphics have been loaded, the button to export to file will appear . Click on the button and save the "custom.bin" file in the CUSTOM folder on the USB stick.
- Then insert the USB stick into the machine and update the logo.

- **Once uploaded, the images will be resized. You should not use images that are too big;**
- **Do not use the provided USB stick to download updates, always use a new USB stick.**
- **The logo can only be customised on machines with a serial number of 664817 onwards.**

ENGLISH

7.3 Info

Press the  button on the main menu to access the screen shown below.

7.3.1 Information

To view the information regarding the software versions that have been installed on the machine, proceed as follows:

- Press the  button;

Information

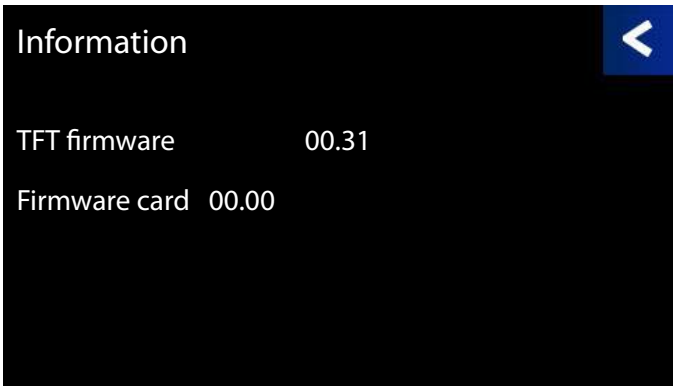

This information is provided:

- **TFT firmware**: shows the firmware version of the installed display board;
- **Firmware card**: shows the motherboard firmware version identified by date and revision number.

7.3.2 Statistics

To view all the information regarding the beverages that have been made over a given period, proceed as follows:

- Press the  button;

Statistics

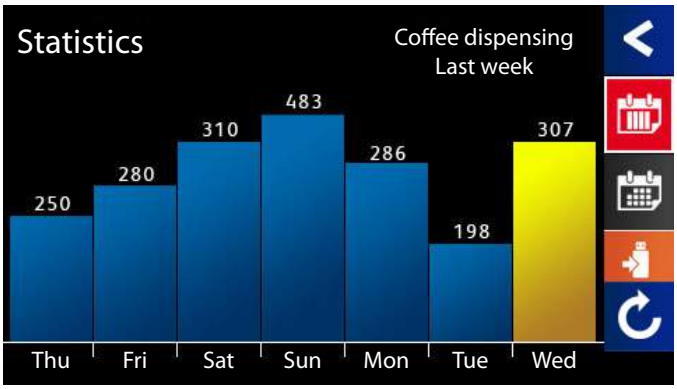

Access this menu and the screen will show the vertical bar chart of the coffee dispensing trends in the past week:

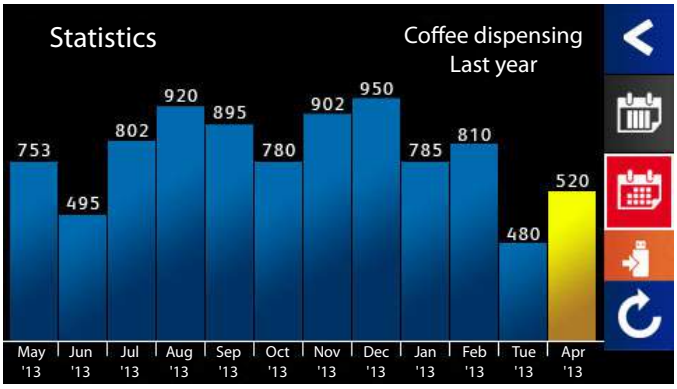

Press the () button to switch to show the monthly view instead. The coffee dispenses in the last year will be shown and divided by month.

To return to the weekly view, press the () button.

The yellow bar indicates the current day / month.

Select the  button and confirm "Yes" when the "Copy Archive" request appears, in order to save all of the data onto the provided USB stick:

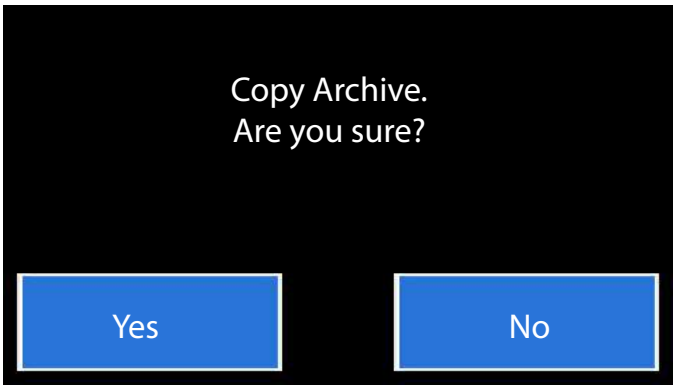

The data is saved in the SBR>STSARCH folder in .bin format. YOU can ask the manufacturer for the special software to manage and process the data.

Select the  button and confirm "Yes" when the "Reset Archive" request appears, in order to delete all of the stored data:

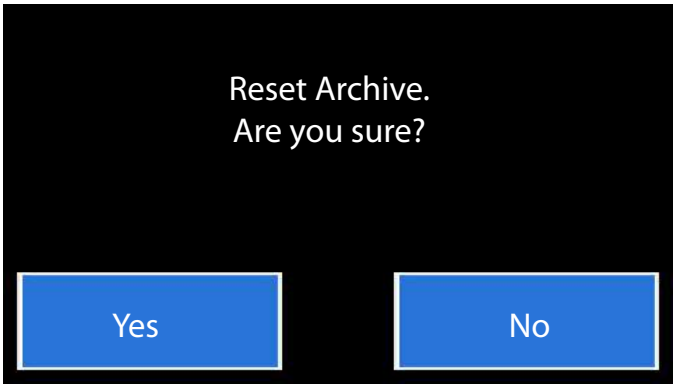

The total counts (life of the machine) cannot be reset.

8. MAINTENANCE AND CLEANING

8.1 Safety precautions

Carefully read the instructions provided in chapter "I. SAFETY PRECAUTIONS" on page 3.

8.2 PPE features

When maintaining and cleaning the machine, the following PPE is required:

	The use of protective gloves is mandatory

8.3 Maintenance

8.3.1 Scheduled maintenance

Carry out scheduled maintenance according to the instructions in the table below.

If the machine is used intensively, the checks need to be performed more frequently. The envisaged operations are outlined in the following pages.

Component	Type of operation	Quarterly	Yearly
PRESSURE SWITCH	• Check the heating unit pressure, which must be between 0.8 and 1.4 bar. • Check the water pressure when coffee is being dispensed: check the pressure indicated on the gauge, which must be between 8 and 9 bar.	X	
FILTERS AND FILTER HOLDERS	Check the condition of the filters. Check for any damage on the edge of the filters and check whether any coffee grounds settle in the coffee cup, and replace the filters and/or filter holders, as required.	X	
DISPENSING GROUP	Replace the shower screen and group gasket as indicated in para. 8.3.3 on page 48.	X	
WATER FILTER	Replace the water filter cartridge at the frequency indicated by the manufacturer. If limescale has formed in the hydraulic circuit, the filter will need to be replaced.	X	
WATER SOFTENER	Carry out the regeneration as instructed by the manufacturer. Take care in areas where the water is very hard. The water will need to be regenerated more frequently, especially if the machine is used intensively.	X	
GRINDER-DISPENSER	• Check the ground coffee dose (around 7 grams each time) and check the degree of grinding. The grinders must always have sharp cutting edges. There will be too much powder in the grounds when they are deteriorating. • We recommend calling the Qualified Technician to replace the flat grinders after every 400/500 kg of coffee. For conical grinders, replace them after every 800/900 kg.	X	
HEATING UNIT	Replace the water in the heating unit as indicated in para. 6.9 on page 32.	X	

Component	Type of operation	Quarterly	Yearly
HEATING UNIT	• Replace the electric heating element if it becomes faulty or malfunctions. • Do not replace the heating element with a more powerful one. Before making any changes, please contact the Manufacturer. • If the thermostat of the heating element is triggered, reset it by pressing the central button of the thermostat. However, before starting the machine up again, check what caused the problem. • Remove and clean the heating unit level probes. • Check whether there is any limescale build-up on the heating element. • If there is a lot of limestone build-up, this indicates that the water filter has not been replaced, or that the softener has not been regenerated. • When replacing any components, always replace the relative gasket as well.		X
SAFETY VALVE SCNR VALVE	Check that the safety valves and non-return drain valves are operating properly, as indicated in para. 8.3.4 and 8.3.5. If these need to be replaced due to malfunction, repeat the check with the newly-installed valve.		X
HYDRAULIC CIRCUIT	• Check whether there is any limescale build-up in the hydraulic circuit. • When replacing any components, always replace the relative gasket as well. • If there is a lot of limestone build-up in the machine's hydraulic circuit, this indicates that the water filter has not been replaced, or that the softener has not been regenerated. • Take care in areas where the water is very hard. The water filter will need to be replaced more frequently and the water softener will need to be regenerated more often, especially if the machine is used intensively		X
DRAIN	• Check for any leaks on the water mains and sewer connections. • Check the state of the drain tray and the drain connection tube.		X
DISPENSING GROUP	Check the efficiency of the dispensing group's solenoid valve.		X
WATER and STEAM NOZZLES	Check the condition of the nozzles and clean the sprayer.		X
DOSING DEVICE	Check and clean the volumetric dosing device by removing any oxidation from the tips.		X
ELECTRIC SYSTEM	Check and clean the volumetric dosing device by removing any oxidation from the tips.		X
TOUCHSCREEN	• Check that the touchscreen is working correctly and adjust the parameters if necessary. • View the machine counts and check the performed work cycles.		X
MOTOR PUMP	Check that the motor pump is working correctly and adjust if necessary.		X

If any work is carried out on the machine electronics when the machine is still live, any guarantee will automatically be invalidated.

All original spare parts are available from the Manufacturer's website. THE Manufacturer may provide the list of spare parts recommended for the maintaining the various versions of the machine.

8.3.2 Maintenance after a short period of machine inactivity

"Short period of machine inactivity" refers to a period of time exceeding one working week.

If the machine is switched back on after this period, a Qualified Technician must replace all the water inside the hydraulic circuits as indicated in para. 6.9 on page 32.

All the scheduled maintenance operations must also be performed - see the previous paragraph.

ENGLISH

8.3.3 Dispensing group maintenance

Replace the dispensing group's shower screen (**2**) and group gasket (**4**) on a quarterly basis (it is recommended to use original spare parts only), by proceeding as follows:

- Unscrew the screw (**1**);
- Remove the shower screen containment ring (**3**);
- Replace the group shower screen (**2**) and the rubber group gasket (**4**);
- Reassemble the components.

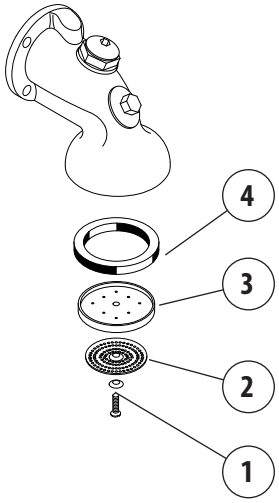

8.3.4 SAFETY VALVE check

The pressure relief valve is one of the main components for machine safety. Therefore, it is important to carry out the following checks:

First check:

- Remove the machine's upper grille;
- Use pliers to pull the valve pin (3) upwards;
- If the pin will not budge, it probably means that the valve is encrusted with limestone and must be replaced.

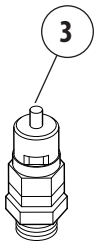

Second check:

- Turn the machine off;
- Close off the pressure switch contacts;
- Turn the machine back on and wait for the pressure in the heating unit to rise.
- Check that the valve is working correctly at the maximum pressure of 1.9 bar.

If any malfunctions are detected, the valve must be replaced. Only use the Manufacturer's original Safety Valves.

8.3.5 NEGATIVE PRESSURE VALVE check

First check:

- Remove the machine's upper grille;
- Use pliers to push the valve pin (**5**) downwards;
- If the pin will not budge, it probably means that the valve is encrusted with limestone and must be replaced.

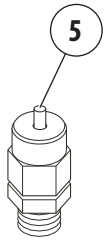

Second check:

- Turn the machine off;
- Open the steam valves and release all the pressure from inside the heating unit;
- Turn the machine back on and check that the valve is closing normally.

If any malfunctions are detected, the valve must be replaced.

8.3.6 NON-RETURN DRAIN VALVE check

The non-return drain valve is an important component for the correct operation of the machine. Perform the check as follows:

- Activate the dispensing groups for about 30 seconds;
- Attach a filter holder (4) with a pressure gauge (available on request) to the dispensing group;
- Activate the dispensing group, and use the pressure gauge (5) to monitor the pressure as it increases up to 8-9 bar;
- Check that the pressure is increasing due to the heated water expanding until it reaches approximately 12 bar: when this value is reached, it confirms that the valve is working correctly and the seals and solenoid valves are tight;
- Stop dispensing;
- Repeat the check on the other dispensing groups.

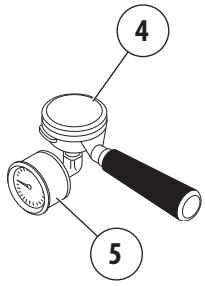

If any malfunctions are detected, the valve must be replaced.

8.3.7 Viewing the warnings

THE last 8 warnings detected by the machine can be viewed.

- Select the 

button;

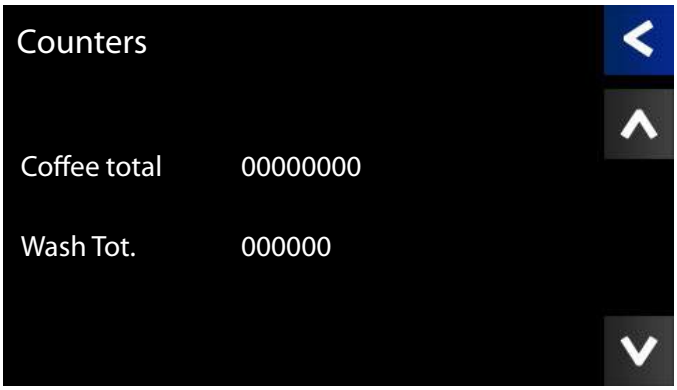

- Scroll through the various screens with the arrows (⮝) or (⮝), until you see the screen below:

The screen shows the last eight warnings stored by the machine.

The alongside table provides a description of each warning code.

Code	Warning description
01	heating unit fillingup timeout warning
02	
03	
04	heating unit heating timeout warning
05	cup warmer NTC probe open warning
06	cup warmer NTC probe s/c warning
07	water filter max. litres warning
08	steam wand NTC probe open warning
09	steam wand NTC probe s/c warning
10	
11	heating unit electronic pressure switch not active warning
12	excessive pressure in the heating unit warning
13	mains electronic pressure switch not active warning
14	excessive mains pressure warning
15	no impulses from group 1 warning
16	no impulses from group 2 warning
17	no impulses from group 3 warning
18	no impulses from group 4 warning

To reset the warnings on the display, proceed as follows:

- Press the reset button ( );
- In the next screen answer "Yes";
- All warnings will be reset.

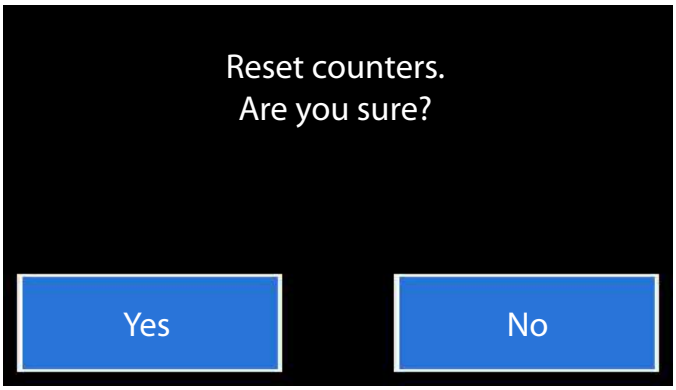

The warnings can ONLY be viewed and reset by the technician.

ENGLISH

8.4 Water filter maintenance

8.4.1 Determining the water hardness

As part of the filter maintenance, it is advisable to test the water beforehand.

To identify the carbonate hardness of the water use the special kit as follows:

1. Put 10 ml of water to be tested (**1**) in the test tube;
2. Add a drop of reagent (**2**) and mix;
3. Proceed in the same way by counting the number of drops until the solution (**3**) turns from blue to red.

1 DROP = 1°dKH

Example: 9 Drops ----> 9°dKH carbonate hardness

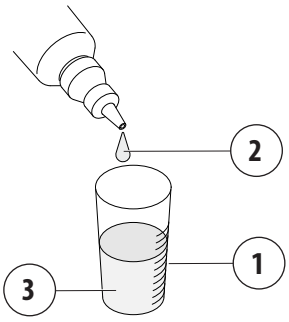

8.4.2 Bypass configuration

Depending on the hardness of the water, adjust the bypass of the water filter as shown in the table below. Example:

9°dKH water hardness
↓
Bypass adjustment 2

Water hardness (°dKH)	Bypass Adjust.	Filter capacity (litres)			
		V	M	L	XL
4	3	6,250	9,500	13,000	17,000
5	3	5,000	7,600	10,400	13,600
6	3	4,165	6,330	8,665	11,330
7	3	3,570	5,425	7,425	9,710
8	2	3,125	4,750	6,500	8,500
9	2	2,775	4,220	5,775	7,555
10	2	2,500	3,800	5,200	6,800
12	1	1,865	2,835	3,885	5,080
14	1	1,600	2,430	3,330	4,355
16	0	1,185	1,800	2,465	3,220
20	0	945	1,440	1,970	2,575
24	0	790	1,200	1,640	2,145
≥ 25	0	≤ 755	≤ 1,150	≤ 1,575	≤ 2,060

The values indicated in the table may vary, depending on the type of filter cartridge used.

To adjust the bypass, push the (**4**) button and turn.

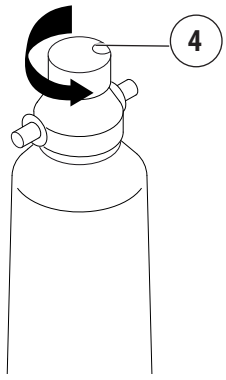

8.4.3 Technical data

Model	V	M	L	XL
Connection type	3/8"	3/8"	3/8"	3/8"
Min.-max. water supply pressure (bar)	2-8	2-8	2-8	2-8
Water temperature min. - max. (°C)	4-30	4-30	4-30	4-30
Min. - max. room temperature (°C)	4-40	4-40	4-40	4-40
Total height (A) without bracket (mm)	420	475	500	500
Total height (B) with bracket (mm)	445	500	530	530
Connection (C) height (mm)	370	425	450	450
Distance from the floor (D) (mm)	65	65	65	65
Filter head width (E) (mm)	125	125	125	125
Filter cartridge diameter (F) (mm)	115	130	145	145
Weight (kg) (empty/with water)	2.1/3.2	2.4/4.2	3.4/5.9	3.8/6.0

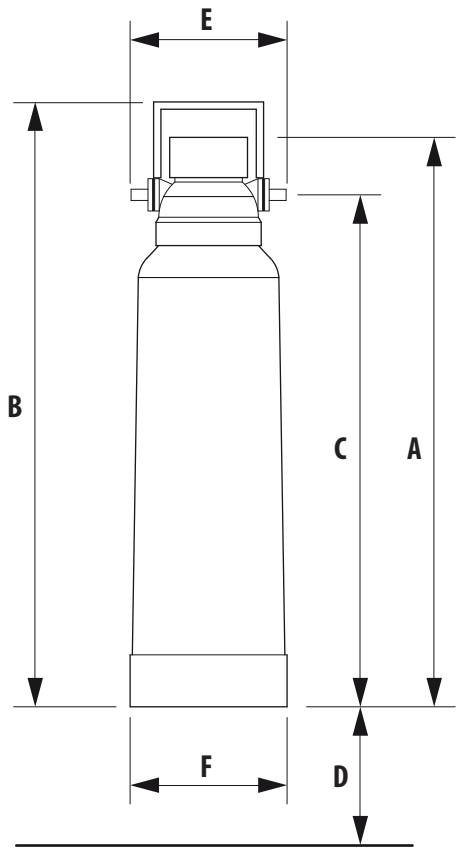

ENGLISH

Replace the water filter cartridge at the frequency indicated by the manufacturer.

For water filter use and maintenance, follow the indications by the manufacturer.

8.5 Water softener regeneration

It is very important to regenerate the softener within the established times. The regeneration is to be carried out regularly: every 15 days. However, in locations where the water is very hard, it will be need to be regenerated more frequently. The same rule can be applied to locations where there is a large consumption of hot water (for tea, etc.):

Proceed as follows:

- Move the lever (**B**) and (**E**) from left to right;
- Remove the lid by unscrewing the knob (**A**);
- Release enough water through the pipe (**C**) to make room for the amount of salt required depending on the model (see table);
- Clean any salt or resin residues from the gasket located on the lid;
- Put the cover back on by securely screwing the knob (**A**) and move the lever (**B**) back from right to left;
- Let the salt water drain from the little hose (**D**) until the water is no longer salty (about 30-60 minutes). The salt allows the accumulated mineral salts to be released;
- Switch the lever (**E**) from right to left, back to its initial position.

The build-up of limescale in the hydraulic circuit and heating unit inhibits thermal exchange, which prevents the machine from working properly. Heavy incrustations in the heating unit may cause long machine shutdowns and in any case invalidate any guarantee, because this symptom indicates that regeneration has been neglected.

In order to keep the water softener, and hence the machine, in perfect operating condition, it is necessary to regularly regenerate it, depending on the softener and hardness of the water used. The table below shows the quantity of softened water based on the hardness of the water in the various units of measurement:

- °f: French degree
- °d: German degree = 1.8°f
- mg $CaCO_3$

For further information on softener installation, start-up and regeneration, refer to the instruction manual.

Amount of softened water based on hardness

°f	30	40	60	80	salt
°d	16.5	22	33	44	
mg $CaCO_3$	30	40	60	80	
8 litres	1000 L	900 L	700 L	500 L	1.0 kg
12 litres	1500 L	1350 L	1050 L	750 L	1.5 kg
16 litres	2100 L	1800 L	1400 L	1000 L	2.0 kg

Softener model	Amount of salt
8 litres	1.0 kg
12 litres	1.5 kg
16 litres	2.0 kg

To use and regenerate the water softener, follow the instructions provided by the manufacturer.

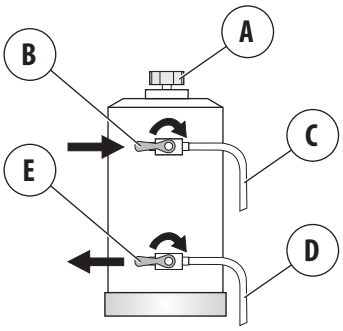

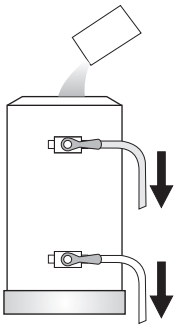

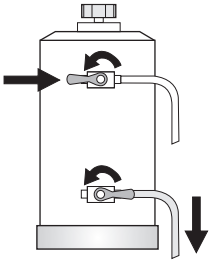

8.6 Malfunctions and solutions

Problem	Cause	Action
NO MACHINE POWER	• The main switch is in the "OFF" position. • The machine switch is faulty. • The mains switch is in the OFF position. • The wiring is defective.	• Turn the main switch to the ON position. • Replace the main switch. • Turn the mains switch to the ON position. • Check for any faulty connections.
NO WATER IN THE HEATING UNIT	• The water mains tap is shut off. • The cut-off tap of the automatic level device is closed. • The pump filter is clogged. • The motor pump is disconnected or jammed. • The water filling solenoid valve is faulty. • The water inlet solenoid valve filter is clogged.	• Open the water mains tap. • Open the automatic level device tap. • Replace the pump filter. • Check the motor pump. • Replace the water filling solenoid valve. • Clean or replace the solenoid valve filter.
TOO MUCH WATER IN THE HEATING UNIT	• The solenoid valve of the automatic level device is faulty. • The level probe is out of order (clogged by limescale).	• Replace the solenoid valve of the automatic level device. • Replace the level probe.
WATER LEAKS FROM THE MACHINE	• The tray is not draining. • The drain pipe is broken, has detached, or the water flow is obstructed. • Water is leaking from the hydraulic circuit.	• Check the sewer drain. • Check and restore the drain pipe connection to the tray. • Restore the hydraulic seal by replacing the pipe, the gasket or the fitting as necessary.
WATER LEAKS FROM THE DISPENSING GROUP	• The group gasket is worn.	• Replace the group gasket.
THE DISPLAY INDICATES NON-CONFORMING PRESSURE	• The display is faulty. • The motor pump has been calibrated incorrectly.	• Replace the display. • Adjust the motor pump calibration.
THE SAFETY VALVE HAS CUT-IN	• The electronic control unit is faulty.	• Check that the electronic system is working properly.
STEAM DOES NOT COME OUT OF THE NOZZLES	• The machine is switched off. • The electrical heating element is faulty. • The temperature probe is faulty. • The nozzle sprayer is clogged. • The safety thermostat is deactivated or faulty.	• Turn on the machine. • Replace the electrical heating element. • Replace the temperature probe. • Clean the steam nozzle sprayer. • Reactivate the thermostat or replace it.
WATER OR STEAM MIXED WITH WATER COMES OUT OF THE STEAM NOZZLES	• The level of the heating unit is too high due to the level probe being incorrectly positioned inside the heating unit or the presence of limestone. • The heating unit filling solenoid valve is leaking.	• Check the condition of the level probe: check if it is positioned correctly and check for any surface limescale. • Clean and replace the filling solenoid valve.
NO COFFEE IS DISPENSING	• There is no water in the mains. • The group solenoid valve is faulty. • The pump is jammed. • The group solenoid valve is clogged or dirty. • The group filter is clogged. • The volumetric dosing device is jammed. • The inlet and outlet taps of the dosing device are closed. • The outlet nozzle of the volumetric dosing device is dirty.	• Check that there is water in the mains. • Replace the group solenoid valve. • Replace the pump. • Clean or replace the solenoid valve. • Clean or replace the filter. • Check/replace the dosing device. • Open the taps. • Clean or replace the nozzle.
THE COFFEE GROUNDS ARE WET	• The group solenoid valve drain is clogged. • The dispensing group is too cold. • The coffee has been ground too finely. • There's not enough ground coffee.	• Clean the group drain. • Wait until the group has fully heated up. • Adjust the coffee grinder. • Increase the amount of ground coffee.
GROUNDS FOUND IN CUPS	• The filter holder is dirty. • The filter holes are worn. • The coffee has not been ground evenly. • The group gasket is worn. • The pump pressure is too high.	• Clean the filter holder. • Replace the filter. • Replace the grinders. • Replace the seal. • Adjust the pump pressure.
THE CUP IS DIRTY WITH COFFEE SPLASHES	• There are steam pockets in the dispensing system. • There are air pockets in the hydraulic circuit. • The coffee has been ground too coarsely.	• Reduce the water temperature. • Check the cause and resolve the problem. • Adjust the grinder as appropriate.

ENGLISH

Problem	Cause	Action
THE COFFEE IS TOO COLD	• The heating element of the coffee heating unit is faulty. • The wiring is faulty. • There is limescale on the heating element. • The heating element protection thermostat has cut-in. • Limescale has reduced the water circulation. • The dispensing group is cold.	• Replace the electrical heating element. • Check for any faulty connections. • Clean the machine. • Reset the safety heating element. • Clean the exchanger connections, and clean or replace the two circulation pipes. • Eliminate air pockets in the hydraulic circuit in the following manner: - Disconnect the pump from the power supply; - Close the softener water tap; - Perform a dry dispensing run for a few minutes; - Reconnect the pump to the power supply; - Open the water outlet tap of the softener; - Dispense until water comes out; - Wait a few minutes for it to heat up.
THE COFFEE IS TOO HOT	• The heating unit temperature is too high.	• Reduce the pressure in the heating unit.
COFFEE IS BEING DISPENSED TOO QUICKLY	• The coffee has been ground too coarsely. • The diameter of the injector is too big. • The ground coffee dose is too small.	• Adjust the coffee grinder. • Replace the injector with one that has a smaller diameter. • Check the amount (grams) of ground coffee being used.
COFFEE IS BEING DISPENSED TOO SLOWLY	• The coffee has been ground too finely. • The injector is clogged. • The dispensing group is clogged. • The filter holder is dirty.	• Adjust the coffee grinder. • Replace the injector. • Check and clean the dispensing group. • Clean and replace the filters, if necessary.
THE ELECTRONIC SYSTEM HAS SHUTDOWN	• The control unit main fuse has burned out. • One of the volumetric dosing device's contacts is grounded.	• Replace the main fuse. • Check the volumetric dosing device connection.
COFFEE IS BEING DISPENSED UNEVENLY THE COFFEE DOSE IS NOT BEING MET	• The volumetric dosing device connection is faulty. • The electronic control unit connection is faulty. • The volumetric dosing device connector is wet. • The volumetric dosing device is faulty: the LED does not flash during the dispensing process. • The coffee has been ground too finely: there isn't enough water flow in the dosing device. • The non-return valve is losing pressure (the dose is too small). • The expansion valves are losing pressure (the dose is too small). • Water is leaking from the group solenoid valve when coffee is being dispensed or when in standby. • The volumetric dosing device is partially obstructed.	• Check that the volumetric dosing device connector has been connected properly. • Check that the connector has been connected correctly to the electronic control unit. • Remove the volumetric dosing device connector and thoroughly dry the contacts. • Replace the heads of the volumetric dosing device or replace the whole dosing device. • Suitably adjust the grind and check the grinders, if necessary. • Check and replace the non-return valve, if necessary. • Check and replace the expansion valves, if necessary. • Clean and replace the solenoid valve, if necessary. • Clean or replace the volumetric dosing device.
UNEVEN AMOUNTS OF MILK ARE DISPENSING FROM THE CAPPUCCINO MAKER	• The milk has run out. • The milk injector is clogged. • The cappuccino maker is clogged. • The suction hose is clogged. • The silicone tube is detached.	• Refill the milk. • Clean the milk injector. • Clean the cappuccino maker. • Clean the milk suction hose. • Connect the hose correctly.
THERE ARE AIR POCKETS IN THE MILK FROTH FROM THE CAPPUCCINO MAKER	• The air regulator is open too much. • The air suction hose is disconnected from the cappuccino maker.	• Properly calibrate the air regulator. • Restore the connection via the hose.

If the problem cannot be resolved, turn the machine off and contact the Manufacturer.

8.7 Cleaning operations

A few simple cleaning tasks are required to have a perfectly sanitised and efficient appliance. The instructions provided here apply when the machine is being used on a regular basis. If the machine is used consistently, cleaning should be performed more frequently.

Do not use alkaline cleaners, solvents, alcohol or aggressive substances. The products/cleaners used must be suitable for this purpose and not corrode the water circuit elements.

Do not use abrasive cleaners which may scratch the bodywork's surface.

Always use clean and sanitised cloths when cleaning.

When washing the filters, filter holders and all machine components, use Manufacturer-supplied cleaners or products specific for cleaning professional coffee machines.

Cleaning	Daily	Weekly
Cappuccino maker: Clean at least once a day or more often if the cappuccino maker is used constantly, by following the instructions in para. 8.7.2.	X	
Body and Grilles: Clean the panels of the body with a cloth dampened in lukewarm water. Remove the drip tray and cup holder grille and wash with hot water.	X	
Filters and Filter Holders: Wash the filters and filter holders on a daily and weekly basis, as indicated in para. 8.7.3. Clean the raised cup grilles as indicated in par. 8.7.7 .	X	X
Steam nozzle / steam wand: Keep the nozzle clean at all times using a cloth dampened in lukewarm water. Check and clean the nozzle tips, by clearing the steam outlet holes with a small needle. Wash these on a daily basis, as indicated in para. 8.7.4	X	X
Dispensing group: Wash the dispensing group as described in paragraphs 8.7.5 and 8.7.6 Wash the components on a weekly basis, as described in para. 8.7.8. Clean the raised cup grilles as indicated in par. 8.7.7 .	X	X
Grinder-dispenser and Hopper: Clean the hopper and the dispenser inside and out with a cloth dampened with warm water. When finished, dry all parts thoroughly.		X

8.7.1 Cappuccino maker wash

Take special care when cleaning the cappuccino maker and follow the steps provided below:

- Perform an initial wash by immersing the suction hose into the water and dispensing for a few seconds;
- Turn the rotating body (**X**) 90° to position **B** (the milk outlet duct closes);
- Whilst holding the milk suction hose in the air, dispense steam (cappuccino maker dry run);
- Wait around 20 seconds so that the cappuccino maker can be internally cleaned and sterilised;
- Close the steam and put the rotating body back into position **A**;
- If the air intake hole (**Y**) is blocked, clear it gently using a pin.

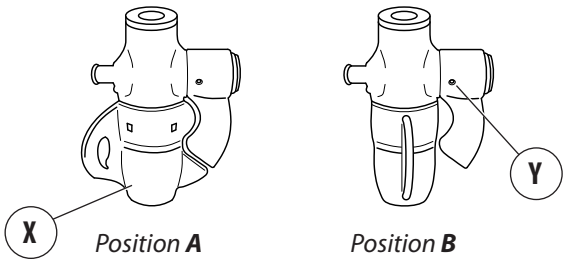

Clean the cappuccino maker after each continuous use and at least once a day.

8.7.2 Cleaning the filters and filter holders

Daily:

- Soak the filter and filter holder in hot water so that the fatty coffee deposits can dissolve;
- Rinse everything in cold water.

Weekly:

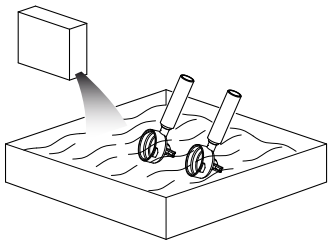

- Use a screwdriver to detach the filter from the filter holder;
- Soak the filter and filter holder in warm water with a suitable cleaner for 10 minutes;
- Rinse everything in cold water.

Caution: Only immerse the filter holder cup, avoid soaking the handle in water.

The cleaner must be diluted in cold water at doses recommended on the package (see the manufacturer's tips).

8.7.3 Cleaning the steam nozzle / steam wand

Clean the steam nozzle/steam wand on a daily basis as follows:

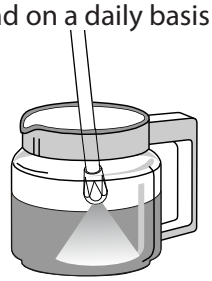

- Insert the steam wand into a jug with water and a specific cleaner, in accordance with the manufacturer's instructions;
- Heat the solution with the steam nozzle;
- Let the nozzle cool down whilst keeping it immersed in the solution for at least 5 minutes, so that cleaner can rise inside the nozzle due to the cooling effect;
- Repeat the operation 2 or 3 times until no more milk residue is dispensed.

8.7.4 Dispensing group wash for the SAE version

To start the washing procedure, proceed as follows:

- Press and hold down the double espresso (**2**) button on the push button panel of the group that you would like to clean for 10 seconds, until the button's LED starts to flash;
- Pour the special detergent into the blind filter and attach the filter holder to the dispensing group;
- Press the double espresso button (**2**) again;
- Whilst the machine is performing the first wash cycle, the button LEDs (**1**) and (**2**) flash;
- When the first cycle has finished, the double espresso button LED (**2**) will flash: remove the filter holder from the group;
- Press the double espresso button again (**2**) to carry out the rinse procedure;
- Whilst the machine is performing the rinse procedure, the button LEDs (**1**) and (**2**) flash;
- Once the rinsing procedure has finished (approximately 30 seconds), the machine is ready to dispense normally.

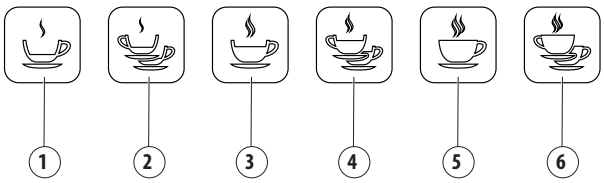

The washing operations can also be carried out simultaneously on multiple dispensing groups. To exit the washing phase, the washing procedure must have been completed on all groups.

8.7.5 SAE-DISPLAY version dispensing group wash

To wash the dispensing groups, press the button in the Parameter menu.

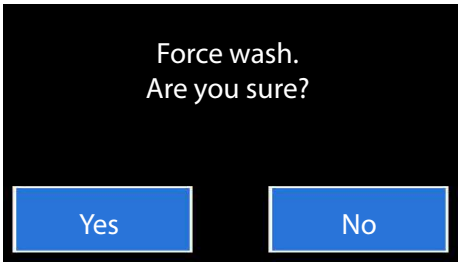

To start the washing procedure, press the "YES" button. "Group cleaning in progress" will appear on the display.

Proceed as follows:

- Pour the specific cleaner into the blind filters and attach the filter holders to the dispensing groups;
- Press each group's double espresso button (2);
- Whilst the machine is performing the first wash cycle, the button LEDs (1) and (2) flash;
- When the first cycle has finished, the double espresso button LEDs (2) flash: remove the filter holders from the groups;
- Press the double espresso buttons again (2) to carry out the rinse procedure;
- Whilst the machine is performing the rinse procedure, the button LEDs (1) and (2) flash;

- Once the rinsing procedure has finished (approximately 30 seconds), the machine is ready to dispense normally.

With this procedure, all of the groups are washed at the same time; each keypad controls the reference group.

8.7.6 Cleaning the shower screen group and filter holder

Clean daily the shower screen group and of the filter holder with the brush provided.

Thoroughly clean the inside of the coupling ring and of the filter holder; as well as the edge and the wings of the filter holder, so as to eliminate any accumulated coffee residues.

Use the special toothbrush supplied (see spare parts catalog).

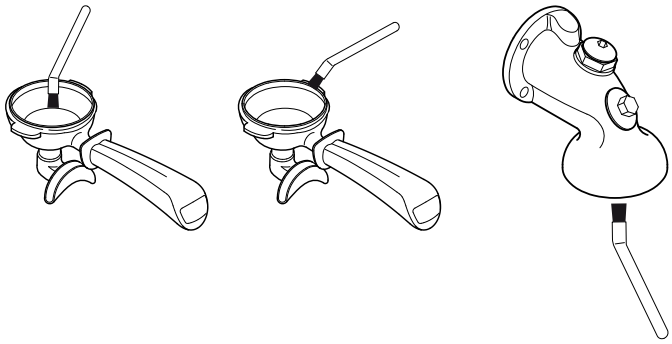

8.7.7 Perforated disk and containment ring cleaning

Weekly perform the cleaning of the Perforated disk and containment ring in the following way:

- Loosen the screw (**1**);
- remove the perforated disk (**2**) and the containment ring (**3**);
- carefully wash the two components with hot water;
- replace perforated disk and containment ring to its original position by locking everything with the screw.

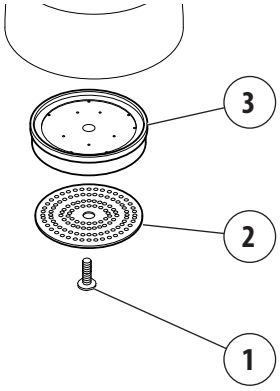

8.7.8 Cup trays

Daily cleaning of the cups trays as follows:

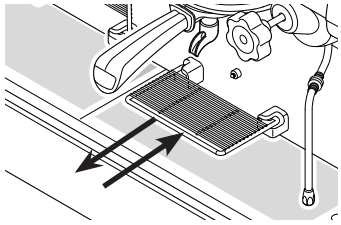

- Disconnect the trays from their housing by positioning them horizontally and pulling them outwards.
- clean with a cloth dampened in lukewarm water.
- reinsert the trays in their housing.

9. SPARE PARTS

To replace machine components and/or parts, refer to the official documentation provided by the Manufacturer.

All original spare parts are available from the Manufacturer's website. The Manufacturer can provide a list of spare parts recommended for maintaining the various versions of the machine on request.

If non-original parts are used, the safety of the machine cannot be guaranteed.

The Manufacturer reserves the right to void the machine guarantee.

ENGLISH

10. DISPLAY WARNINGS

Warning	Cause	Action
THE STEAM HEATING UNIT SENSOR IS OPEN	• The steam heating unit temperature probe is disconnected or faulty.	• Check the connection of the steam heating unit probe and if necessary, replace it.
STEAM HEATING UNIT HEATING CIRCUIT	• The steam heating unit heating circuit is disconnected. • Fuse F7 has burned out. • The static relays are faulty. • The heating element is faulty.	• Check the steam heating unit heating circuit and if necessary, replace the faulty parts.
CUP WARMER SENSOR	• The cup warmer temperature probe is disconnected. • The temperature probe has short-circuited. • The cup warmer has overheated.	• Check the cup warmer probe connection and if necessary, replace it.
STEAM WAND SENSOR	• The steam wand temperature probe is disconnected. • The steam wand probe has short-circuited. • The steam wand probe has overheated.	• Check the steam wand probe connection and if necessary, replace it.
STEAM HEATING UNIT HEATING TIMEOUT	• The steam heating unit heating circuit is disconnected. • The safety thermostat is open. • Fuse F7 has burned out.	• Check the steam heating unit heating circuit and if necessary, replace the burned parts.
FILLINGUP TIMEOUT	FIRST INSTALLATION. • The steam heating unit did not finish the filling procedure within the maximum time (255 seconds). • The level probe does not detect any water.	• Check the steam heating unit water filling hydraulic circuit. • Check that there is water in the water mains. • Check the filling solenoid valve / pump filter. • Check fuse F3 in the control unit.
FILLINGUP TIMEOUT	DURING OPERATION. • The steam heating unit did not finish the filling procedure within the maximum time (90 seconds).	• Check the steam heating unit water filling hydraulic circuit. • Check that there is water in the water mains. • Check the filling solenoid valve / pump filter. • Check fuse F3 in the control unit.
SAFETY LEVEL	• The water in the steam heating unit has dropped below the minimum level.	• Check that the minimum level probe has been connected correctly.
COFFEE WATER PRESSURE IN GROUP #	• The coffee heating unit did not reach the filling pressure within the maximum time (60 seconds).	• Check the hydraulic circuit of the coffee heating unit: • Check that there is water in the water mains. • Check the solenoid valve / pump filter. • Check the volumetric dosing device (filter inlet / 0.5 mm nozzle outlet).
VOLUMETRIC DOSING DEVICE	• The volumetric dosing device is not counting the water.	• Check the volumetric dosing device connection. • Check that there is water in the water mains. • Check the pump filter / volumetric dosing device filter. • Check the 1 mm group nozzle. • Check the 0.5 mm volumetric dosing nozzle.

If the problem cannot be resolved, switch off the machine and contact the Manufacturer.

11. DECOMMISSIONING

11.1 Short period of machine inactivity

"Short period of machine inactivity" refers to a period of time exceeding one working week.

If the machine is switched back on after this period, the Qualified Technician must replace all the water contained in the hydraulic circuits as indicated in para. "6.9 Water renewal" on page 32.

All the scheduled maintenance operations must also be performed - see para. "8.3.1 Scheduled maintenance" on page 46.

11.2 Long period of machine inactivity

"Long period of machine inactivity" refers to a period of time exceeding 30 working days.

In this case, the machine must be disconnected from the electric, hydraulic and gas mains if fitted, and all the internal circuits must be drained of water.

To connect the machine after this period, follow the initial installation procedure.

12. DISASSEMBLY

To disassemble the machine, the installation procedure must be followed in reverse order, see chap."5. INSTALLATION" on page 23.

All dismantled components must be divided by material to make identification easier and then disposed of at the authorised collection centres, as instructed in chap."13. DISPOSAL" on page 59.

13. DISPOSAL

13.1 Disposal information

For the European Union and the European Economic Area only.

This symbol indicates that the product cannot be disposed of with household waste, pursuant to the WEEE Directive (2012/19/EC), the Battery Directive (2006/66/EC) and/or the national laws implementing those Directives.

The product should be handed over to a designated collection point, for example the dealer when purchasing a new product with similar features, or an authorised collection site that recycles electrical and electronic equipment waste (WEEE), as well as batteries and accumulators. Improper handling of this type of waste can have negative consequences on the environment and human health, due to the potentially hazardous substances which are usually found in this kind of waste.

Your cooperation in correctly disposing of this product will contribute to the effective use of natural resources and you will avoid incurring fines provided by law. For more information about recycling this product, contact either your local authority, the entity responsible for waste collection, an authorised dealer or your household waste disposal service.

13.2 Environmental information

The machine features an internal lithium button battery, which is located in the circuit board and ensures data storage.

Dispose of the battery in accordance with current national regulations.

ENGLISH

14. WIRING DIAGRAMS

14.1 ELECTRIC MAINS connection

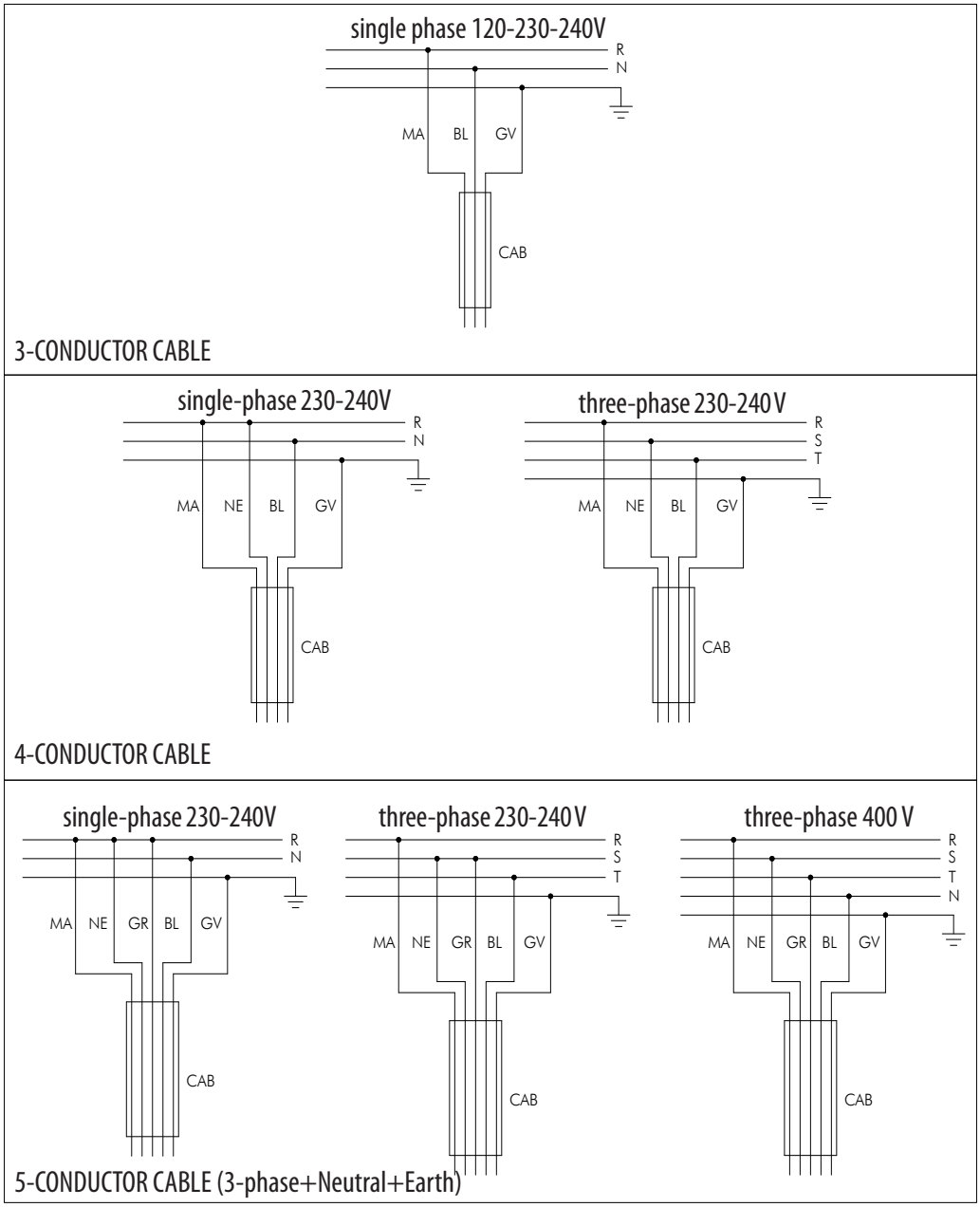

R	Phase
S	Phase
T	Phase
N	Neutral
⏚	Earth

BL	Blue
CAB	Power cable
GR	Grey
GV	Yellow-green
MA	Brown
NE	Black

14.2 SAE wiring diagram

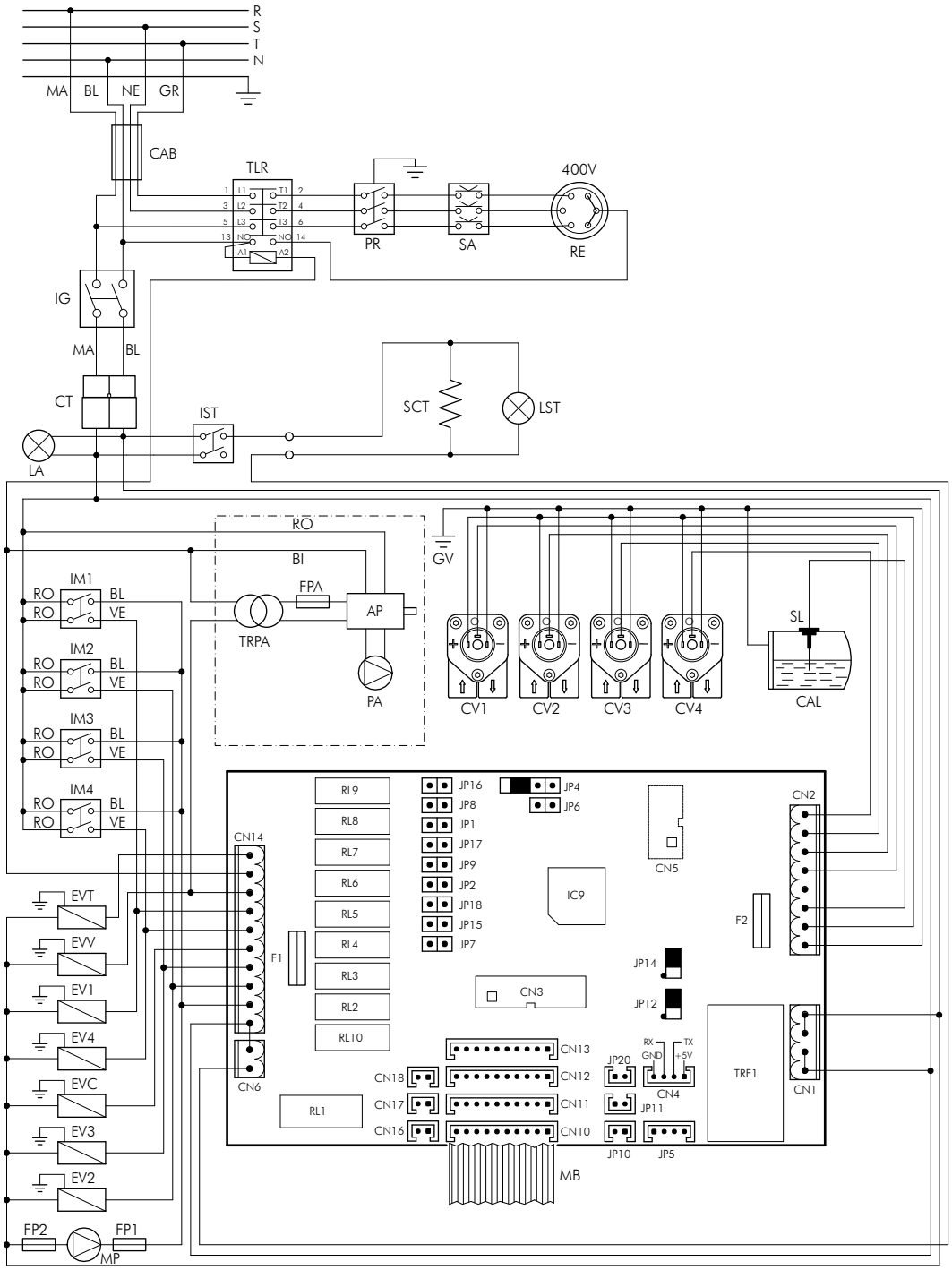

JUMPER	INSERTED	NOT INSERTED
JP1	Serial transmission enabled	Serial transmission disabled
JP2	Pre-infusion enabled	Pre-infusion disabled
JP4	Heating unit filling with pump	Heating unit filling without pump
JP6	Tea dispensing with pump	Tea dispensing without pump
JP7	Continuous function disabled	Continuous function enabled
JP8	Dose count enabled	Dose count disabled
JP9	Credit/Debit enabled	Credit/Debit disabled
JP15	Display function keys enabled	Display function keys disabled
JP16	6-key push button panel enabled	4-key push button panel enabled
JP17	Heating unit temp. check with external pressure switch (always on)	
JP18	Temp./press. heat. management always ON (always inserted)	

(*) Fuses for UL versions where a plug with a capacity greater than 30 A is installed

AP	Air pump supply
BI	White
BL	Blue
CAB	Power cable
CAL	Heating unit
CN1	Power supply connector
CN2	Low voltage connector
CN3	Display connect. diagr. connector
CN4	Serial transmission connector
CN5	Programm. connector ISP
CN6	Cup heater heating el. connector
CN10	GR1 push button panel connector
CN11	GR2 push button panel connector
CN12	GR3 push button panel connector
CN13	GR4 push button panel connector
CN14	Steam outlet connector
CN16	Steam wand NTC connector
CN17	Heating unit NTC connector
CN18	Cup warmer NTC connector
CPA	Air pump connector
CT	Power supply connector
CV1	GR1 volumetric counter
CV2	GR2 volumetric counter
CV3	GR3 volumetric counter
CV4	GR4 volumetric counter
EV1	Solenoid valve GR1
EV2	Solenoid valve GR2
EV3	Solenoid valve GR3
EV4	Solenoid valve GR4
EVC	Heating unit filling solenoid valve
EVT	Tea solenoid valve
EVV	Steam solenoid valve
F1	Inlet fuse (6.3 A)
F2	Motor pump fuse (500 mA)
FP1(*)	Motor pump UL (OPD) fuse
FP2(*)	UL (OPD) Fuse for 230 V
GR	Grey
GV	Yellow-green
IC9	Microprocessor
IG	Main switch
IM1	GR1 manual switch
IM2	GR2 manual switch
IM3	GR3 manual switch
IM4	GR4 manual switch
IST	Cup warmer switch
LA	Indicator light
MA	Brown
MB	Push button panel membrane
MP	Motor pump
NE	Black
PA	Vcc air pump
PR	Pressure switch
RE	Heating element
RO	Red
SA	Safety heating element
SCT	Cup warmer heating element
SL	Level probe
TLR	Remote switch
TRF1	Transformer
TRPA	Air pump transformer
VE	Green

ENGLISH

14.3 SAE DISPLAY wiring diagram

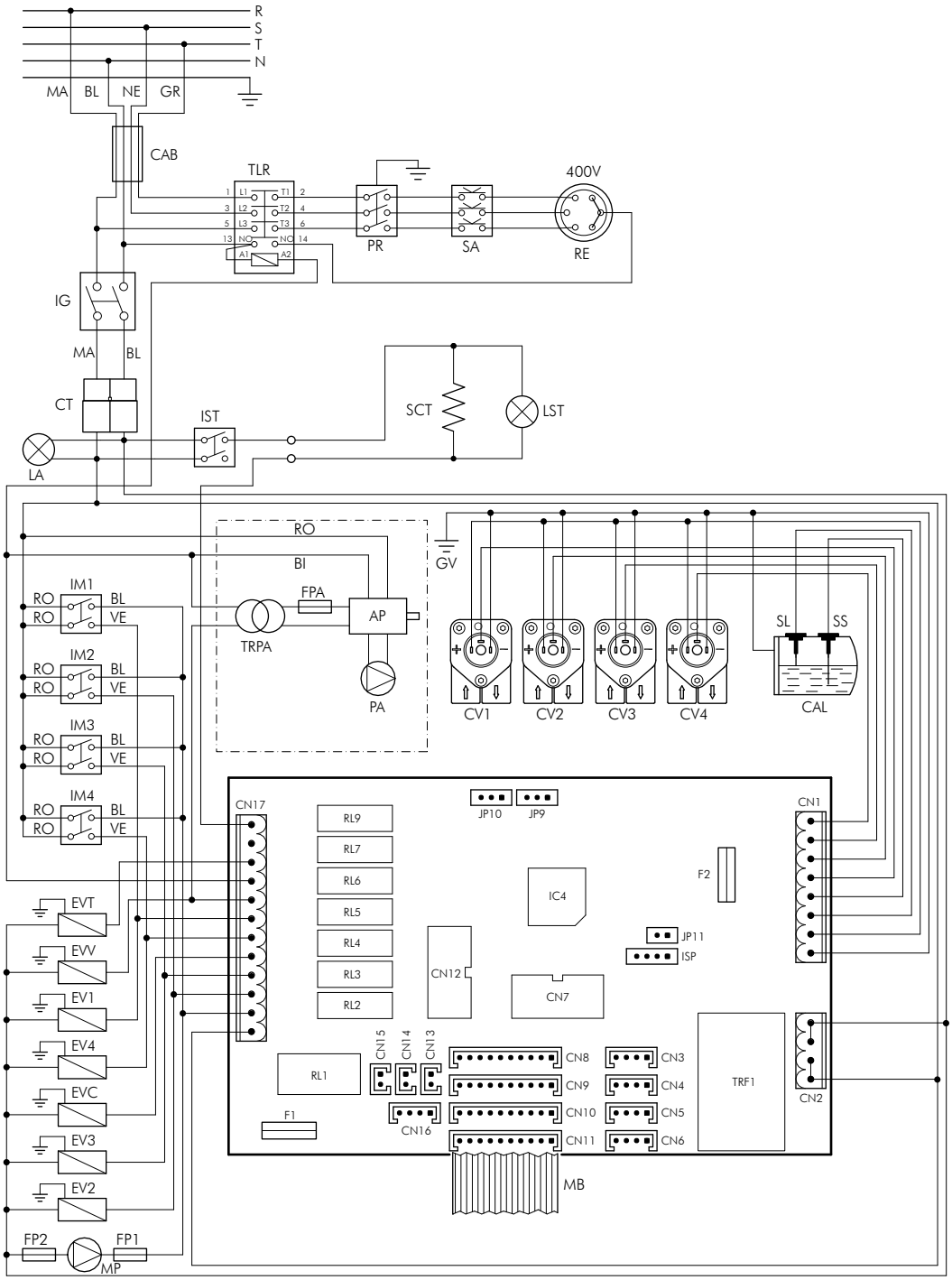

JUMPER	INSERTED
JP9	TX RS232 signal inversion
JP10	RX RS232 signal inversion
JP11	Enable micro reset management

(*) Fuses for UL versions where a plug with a capacity greater than 30 A is installed

AP	Air pump supply
BI	White
BL	Blue
CAB	Power cable
CAL	Heating unit
CN1	Low voltage connector
CN2	Power supply connector
CN3	Steam wand connector
CN4	Tea connector
CN5	Serial transmission connector
CN6	Steam heat. un. press. connector
CN7	Steam wand connector
CN8	GR4 push button panel connector
CN9	GR3 push button panel connector
CN10	GR2 push button panel connector
CN11	GR1 push button panel connector
CN12	Serial display connector
CN13	Milk NTC connector
CN14	Heating unit NTC connector
CN15	Cup warmer NTC connector
CN16	Water mains press. connector
CT	Power supply connector
CV1	GR1 volumetric counter
CV2	GR2 volumetric counter
CV3	GR3 volumetric counter
CV4	GR4 volumetric counter
EV1	Solenoid valve GR1
EV2	Solenoid valve GR2
EV3	Solenoid valve GR3
EV4	Solenoid valve GR4
EVC	Heating unit filling solenoid valve
EVT	Tea solenoid valve
EVV	Steam solenoid valve
F1	Inlet fuse (6.3 A)
F2	Motor pump fuse (500 mA)
FP1(*)	UL (OPD) Motor pump fuse
FP2(*)	UL (OPD) Fuse for 230 V
GR	Grey
GV	Yellow-green
IG	Main switch
IM1	GR1 manual switch
IM2	GR2 manual switch
IM3	GR3 manual switch
IM4	GR4 manual switch
IST	Cup warmer switch
LA	Indicator light
LST	Cup warmer indicator light
MA	Brown
MB	Push button panel membrane
MP	Motor pump
NE	Black
PA	Vcc air pump
PR	Pressure switch
RE	Heating element
RO	Red
SA	Safety heating element
SCT	Cup warmer heating element
SL	Level probe
SA	Safety probe
TLR	Remote switch
TRF1	Transformer
TRPA	Air pump transformer
VE	Green

15. HYDRAULIC DIAGRAM

15.1 CTS GROUP hydraulic diagram

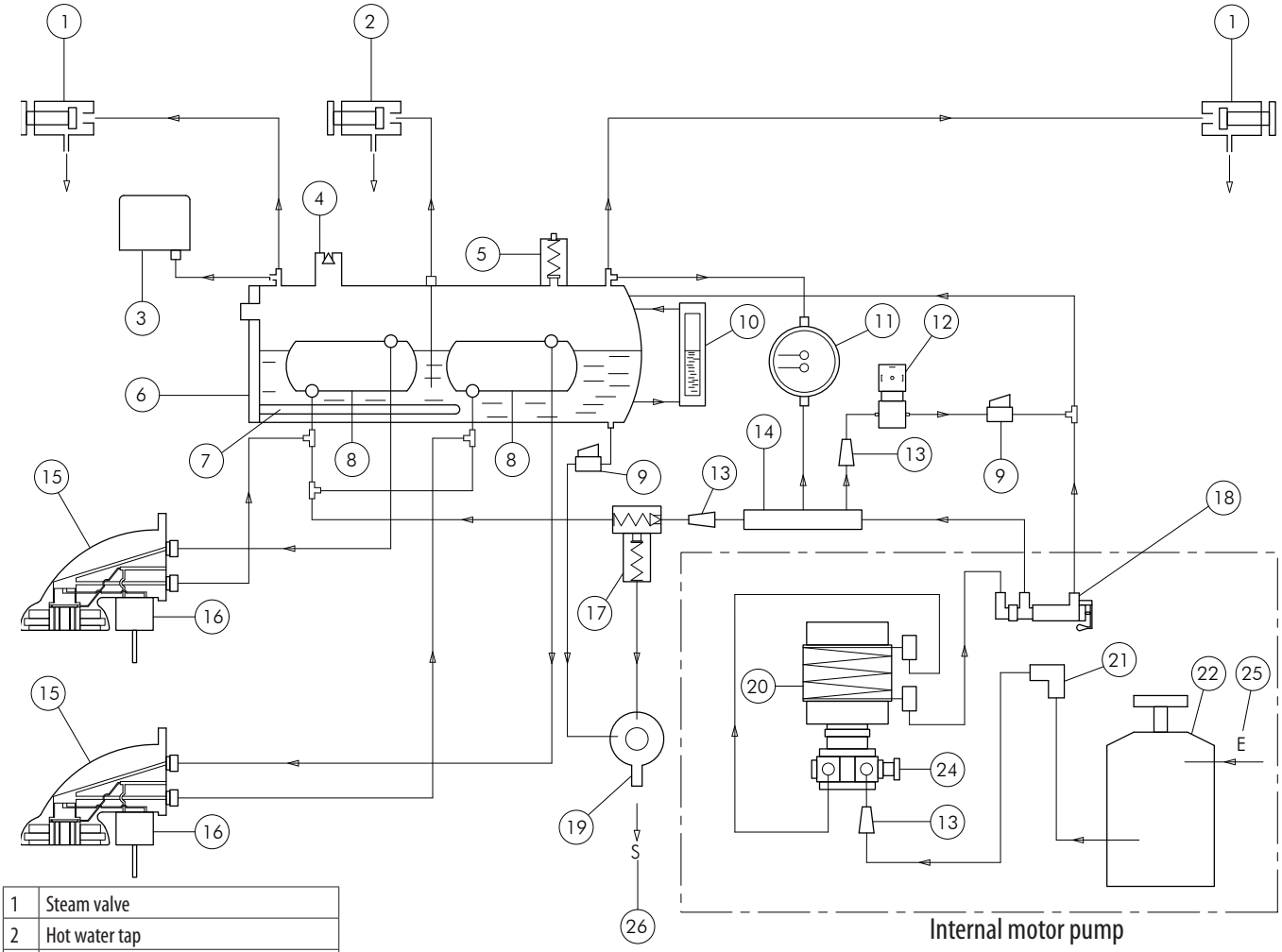

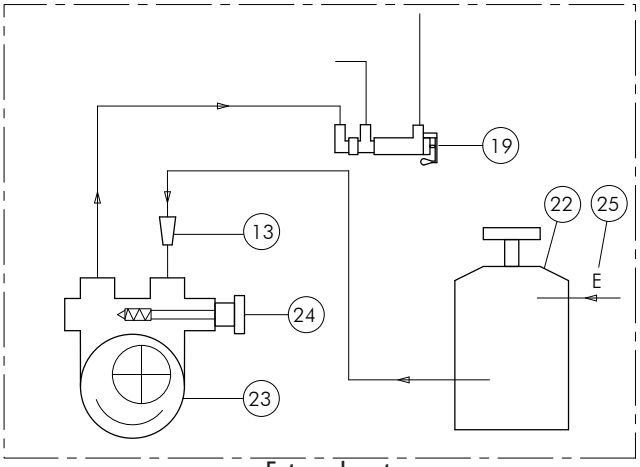

1	Steam valve
2	Hot water tap
3	Pressure switch
4	Negative pressure valve
5	Safety valve
6	Heating unit
7	Heating unit heating element
8	Heat exchanger
9	Heating unit drain tap
10	Optical level
11	Pressure gauge
12	Automatic Water Entry Solenoid Valve
13	Water inlet filter
14	Water dispenser
15	Dispensing group
16	Group solenoid valve
17	SCNR valve
18	Manual water entry tap
19	Drain tray
20	Built-in motor pump
21	Water inlet connection
22	Water softener
23	External motor pump
24	Pump pressure adjustment
25	Water inlet
26	Drain

ENGLISH

15.2 EXTRACTABLE EXCHANGER hydraulic diagram

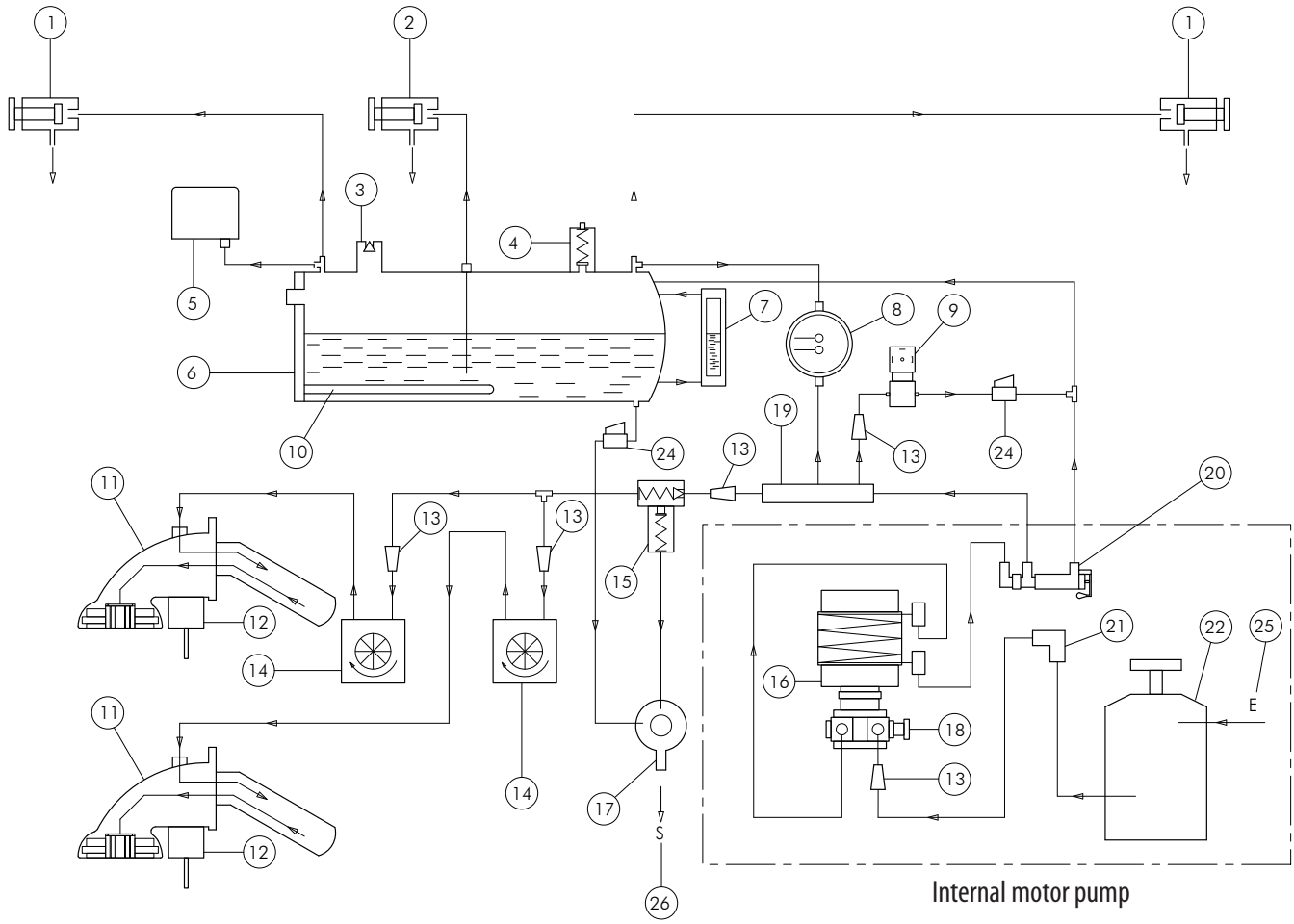

Internal motor pump

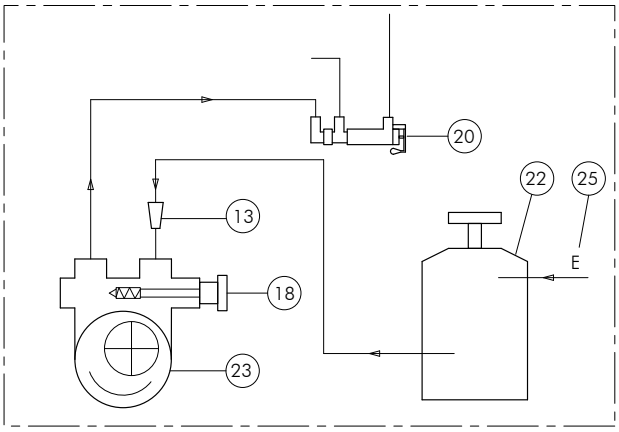

External motor pump

1	Steam valve
2	Hot water tap
3	Negative pressure valve
4	Safety valve
5	Pressure switch
6	Heating unit
7	Optical level
8	Pressure gauge
9	Automatic Water Entry Solenoid Valve
10	Heating unit heating element
11	Dispensing group
12	Group solenoid valve
13	Water inlet filter
14	Volumetric dosing device
15	SCNR valve
16	Built-in motor pump
17	Heating unit drain tap
18	Pump pressure adjustment
19	Water dispenser
20	Manual water entry tap
21	Water inlet connection
22	Water softener
23	External motor pump
24	Heating unit drain tap
25	Water inlet
26	Drain

16. CREDIT - DEBIT SYSTEM

To activate the credit - debit system, enter the Settings menu and then the Configurations submenu, as indicated in para. 7.2.7 on page 41.

16.1 CREDIT - DEBIT system with direct connection to the till

The CREDIT-DEBIT system allows coffees to be dispensed from the machine only after the beverages have been paid for at the till.

The system is structured as follows:

16.1.1 Installation

When installing, proceed as follows:

- Turn the machine off;
- Position switches **11** and **15** of the **SW2** microswitch battery in the **ON** position, as shown in the wiring diagram;
- Connect the standard **CS** serial cable (code: **22556004**) to the other end of the **CC** cable and to the till;
- Turn the machine back on.

- **The till management software and the standard CS serial cable is not the responsibility of the manufacturer.**
- **YOU can use a different serial cable than the one supplied by the manufacturer (code: 22556004) can be used, as long as it is no longer than 15 metres.**

16.1.2 Communication protocol

Description of the operating principle with reference to the diagram shown below:

1. Order the beverage at the till;
2. Select the ordered dose on the coffee machine;
3. The code that corresponds to the selection is sent to the till (see the code table);
4. The till replies with **ACK=06H**, thus enabling the beverage to be dispensed;
5. The coffee machine dispenses the beverage.

If the till does not identify the code, the machine is not enabled, the selection is not dispensed and the till sends the **NACK=15H** code.

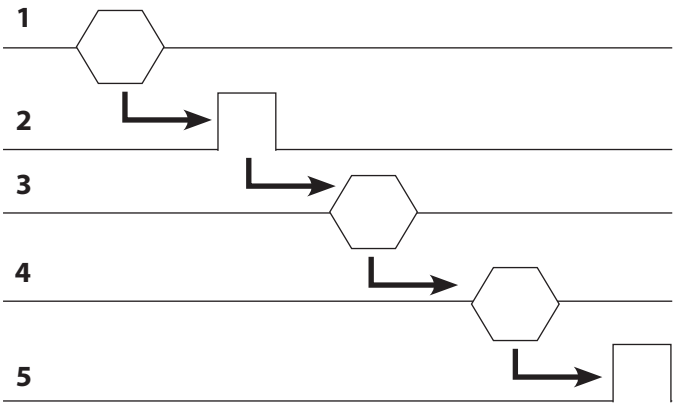

• **Baud rate: 1200**	• **1 bit Stop**
• **8 bit**	• **Parity N (none)**

ENGLISH

16.2 DEBIT - CREDIT system with direct connection to the till

The DEBIT-CREDIT system allows beverages to be paid for after they have been dispensed, as the doses are registered by the coffee machine's till.

The system is structured as follows:

16.2.1 Installation

When installing, proceed as follows:

- Turn the machine off;
- Position switch **15** of the **SW2** microswitch battery in the **ON** position, as shown in the wiring diagram;
- Connect the standard **CS** serial cable (code: **22556004**) to the other end of the **CC** cable and to the till;
- Turn the machine back on.

- **The till management software and the standard CS serial cable is not the responsibility of the manufacturer.**
- **YOU can use a different serial cable than the one supplied by the manufacturer (code: 22556004) can be used, as long as it is no longer than 15 metres.**

16.2.2 Communication protocol

Description of the operating principle with reference to the diagram shown below:

1. Select the desired dose on the coffee machine;
2. The code that corresponds to the selection is sent to the till (see the code table);
3. The till replies with **ACK=1H** thus enabling the beverage to be dispensed;
4. The coffee machine dispenses the beverage.
5. The till system registers the dispensed beverage.

If the till does not identify the code, the machine is not enabled, the selection is not dispensed and the till sends the **NACK=0H** code.

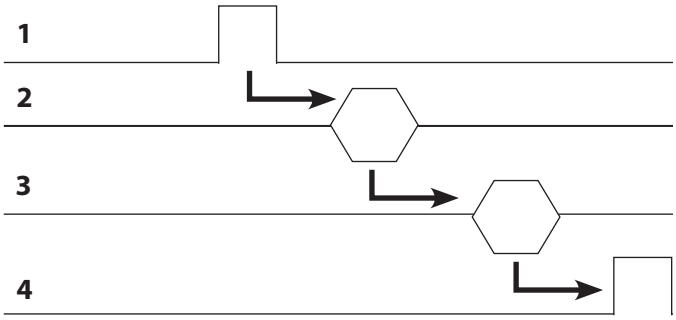

• **Baud rate: 1200**	• **1 bit Stop**
• **8 bit**	• **Parity E (even)**

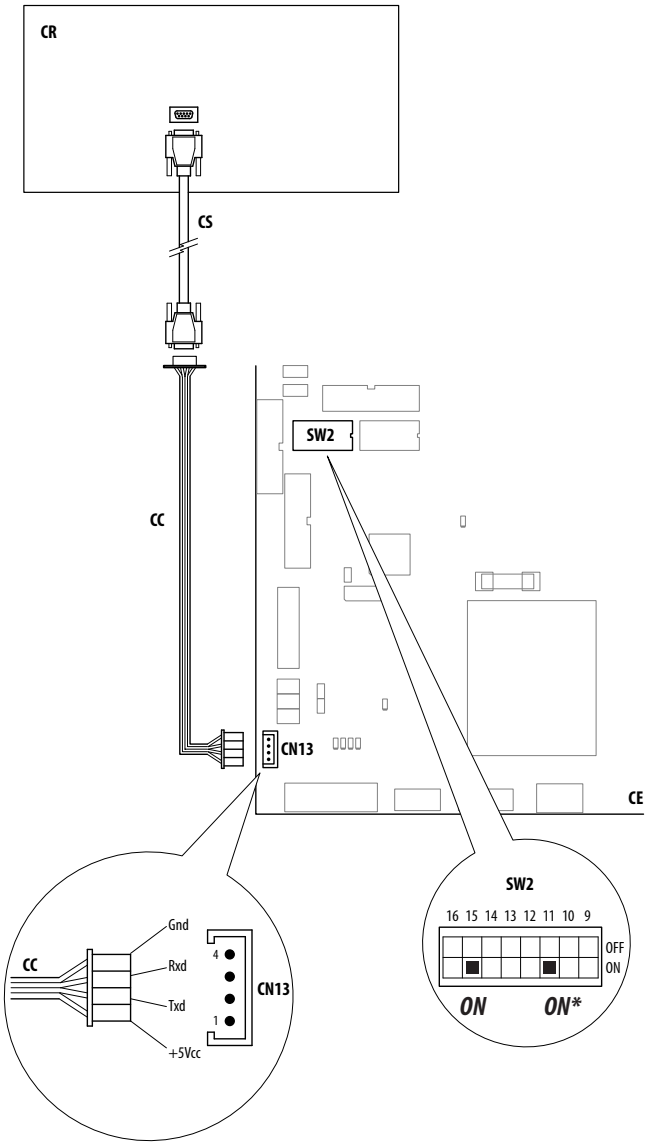

** - only for CREDIT - DEBIT configuration*

Beverage selection code table

Description	*Signal*
1 Espresso GR1	011 h
1 Medium GR1	012 h
1 Large GR1	013 h
2 Espressos GR1	014 h
2 Medium GR1	015 h
2 Large GR1	016 h
1 Espresso GR2	021 h
1 Medium GR2	022 h
1 Large GR2	023 h
2 Espressos GR2	024 h
2 Medium GR2	025 h
2 Large GR2	026 h
1 Espresso GR3	031 h
1 Medium GR3	032 h
1 Large GR3	033 h
2 Espressos GR3	034 h
2 Medium GR3	035 h
2 Large GR3	036 h
1 Espresso GR4	041 h
1 Medium GR4	042 h
1 Large GR4	043 h
2 Espressos GR4	044 h
2 Medium GR4	045 h
2 Large GR4	046 h
Tea 1	051 h
Tea 2	052 h

	CN13	Serial transmission connector.
	CR	Till.
	CE	Control unit, code: 18090167.
	SW	Control unit microswitches.
*	CC	Serial connection cable (supplied), code: 22554012.
*	CS	Serial transmission cable (not supplied), code: 22556004.
*	**Kit Code: 83260061R**	

ENGLISH

17. ALPHABETICAL INDEX OF TOPICS

C

Cappuccino maker - wash....55
Cappuccino maker wash....55
CE - mark....15
CE nameplate....15
Circuit breaker....4
Cleaning....55
Cleaning the cappuccino maker....55
Cleaning the machine....55
Coffee heating unit....16
Commissioning....29
Credit - Debit....65
Credit - Debit system....65
Customer service....10

D

Disassembling the machine....59
Dispensing group wash....56
Display warnings....58
Drilling the support base....26

E

Earthing system....4
Electrical connection....28
Electronic push button panels....19
Environmental conditions....23
Environmental information....59
Expansion - check valve....16
Extractable - version....17

F

Filter holders - preparation....29
Front command push button panel....14

G

Glossary and pictograms....8
Group with an EXTRACTABLE exchanger....17
Guarantee....9

H

Handling the machine....22
Hydraulic connection....27

I

Instruction Manual - Update....8
Intended use....10
Internal battery....59
Internal components....13

L

Lighting....30

M

Machine disposal....59
Machine identification....10
Machine inactivity....59
Machine installation....23
Machine programming....33
Machine storage....23
Machine transport....22
Maintenance....46
Malfunctions and solutions....53
Materials to be used....27
Motor pump....18
Motor pump - adjustment....29

N

Negative pressure valve....16

O

Overflow device....16

P

Perforated disk....57
Perforated disk containment ring....57
Pictograms....9
PPE features....23
Pressure switch....16

R

Raised cup grilles....30
Relative humidity....23
Room temperature....23

S

Safety valve....16
Shower screen....57
Spare parts....57
Steam wand....21
Steam wand - adjustment....30
Steam wand push button panel....14
Support base....24

T

Technical data....15
Thermostat....18
Touchscreen display....14
TSC - version....17
Tuning the machine....32
Turning the machine off....32
Turning the machine on....30

U

Unpacking the machine....22

W

Warning indicators....14
Washing the filters and filter holders....55
Water filter....19
Water hardness....50
Water softener....19
Water supply....27
Weight....22
Wiring diagrams....60

ASTORIA MACCHINE PER CAFFÈ S.R.L.
Via Condotti Bardini, 1 - 31058 SUSEGANA (TV) - ITALY
Tel. +39.0438.6615 - Fax +39.0438.60657
www.astoria.com - info@astoria.com

Cod. 02000762 - Rev. 01 - 12/2018